Downloaded from Arrow.com.

CAD GENERATED DRAWING	DCN CONTROLLED DOCUMENT	DWG.NO. M39012/79B3001

PRODUCT DATA DRAWING

MATERIAL:

BODIES & COUPLING NUT:	STAINLESS STEEL PER AMS-5640, UNS S30300, TYPE I
LOCK RING:	BERYLLIUM COPPER PER ASTM B196
GASKET:	SILICONE RUBBER PER ZZ-R-765, CLASS IIB, GRADE 50/60
INSULATOR:	TEFLON PER ASTM D1710
CONTACT:	BRASS PER ASTM B16

FINISH:

COUPLING NUT:	PASSIVATED PER QQ-P-35, TYPE II
BODY:	GOLD PER ASTM B488, TYPE I, GRADE C, CLASS 1.27 OVER NICKEL PER QQ-N-290, CLASS 1
CONTACT:	GOLD PER ASTM B488, TYPE II, GRADE C, CLASS 1.27 OVER NICKEL PER QQ-N-290, CLASS 1

PERFORMANCE:

IMPEDANCE:	50 OHMS
DWV:	1000 VRMS
FREQ. RANGE:	DC-18.0 GHz
INSUL. RES.:	5000 MEGOHMS, MIN.
VSWR:	1.07+0.008F (GHz) DC TO 18.0 GHz, OR APPROXIMATELY 80% OF THE UPPER CUTOFF FREQUENCY OF THE CABLE, WHICHEVER IS LOWER.

GENERAL:

NON CAPTIVE CONTACT

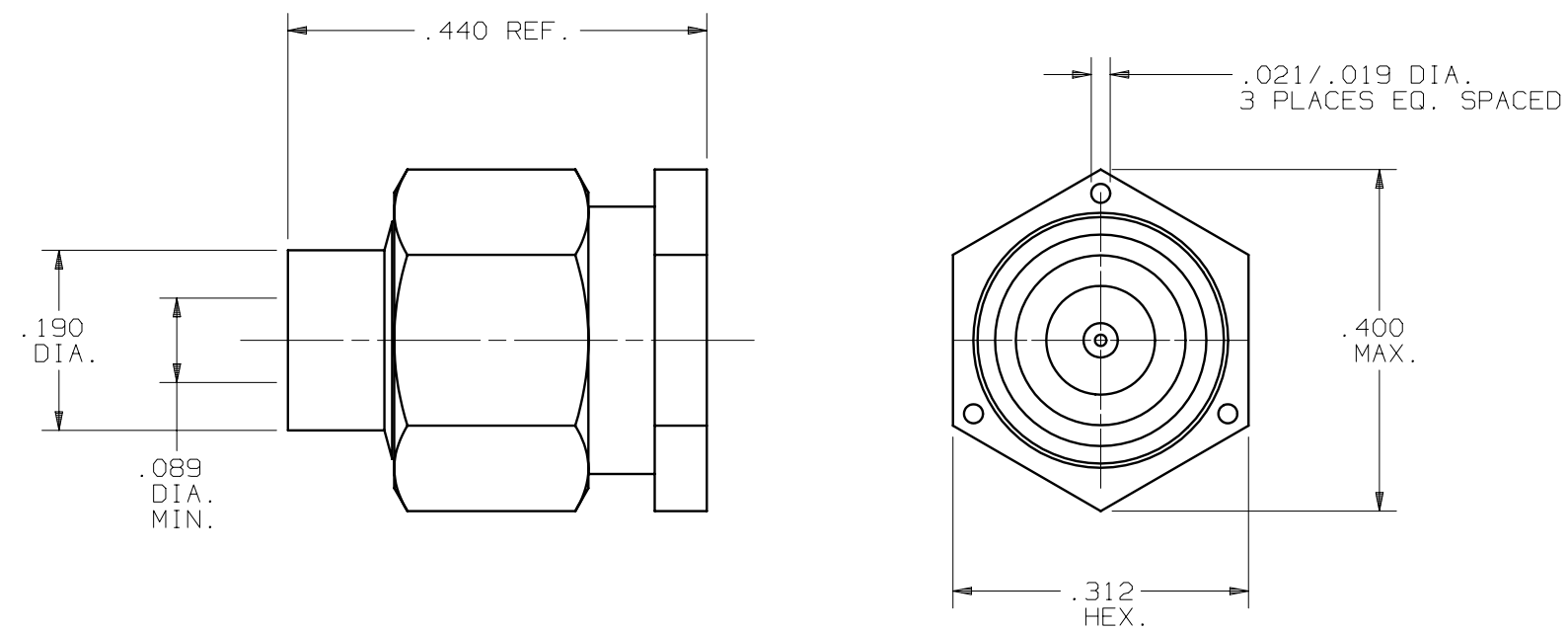

SYM.	DESCRIPTION	DATE	APPR.
-	REL.DCN 31376	04/04	BRT

UNLESS OTHERWISE SPECIFIED:
1) ALL DIMENSIONS ARE AFTER PLATING.
2) BREAK CORNERS & EDGES .005 R.MAX.
3) CHAM. 1st & LAST THDS.
4) SURFACE ROUGHNESS 63 √ MIL-STD-10.
5) DIAS. ON COMMON CENTERS TO BE CONCENTRIC WITHIN .005 T.I.R.
6) REMOVE ALL BURRS.

DIMENSIONS ARE IN INCHES
TOLERANCES:

DECIMALS	FRACTIONAL	ANGULAR
.X ±.030	±1/64	X° ±1°0′
.XX ±.015		X°X′ ±15′
.XXX ±.005		

DRAWN:	BRT 04/24/04	MATERIAL: SEE ABOVE	□″ AREA: N/A
CHECKED:	VMJ 04/26/04	FINISH: SEE ABOVE	
APPROVED:	BRT 04/26/04	SIZE B	CAGE NO. 95077 / SCALE 5X

SV Microwave, Inc.
2400 Centrepark West Drive, Suite 100
West Palm Beach, FL 33409

TITLE: SMA PLUG SOLDER-ON FOR .086 SEMI-RIGID CABLE

DWG.NO. M39012/79B3001