ГК Атлант Инжиниринг – официальный представитель в РФ и СНГ
+7 (495) 109-02-08 sales@bbrc.ru www.bbrc.ru

NOTES:

1. MATERIALS AND FINISHES:
   BODY & HEX NUT - STAINLESS STEEL, PASSIVATED
   CONTACT - BeCu, GOLD PLATING
   INSULATOR - PTFE, NATURAL
   LOCK WASHER - PHOSPHOR BRONZE, NICKEL PLATING
   GASKET - SILICONE RUBBER, RED

2. ELECTRICAL:
   A. IMPEDANCE: 50 OHM

3. MECHANICAL:
   A. DURABILITY: 500 CYCLES MIN.
   B. TEMPERATURE RANGE: -65° C TO +165° C

4. PACKAGING:
   A. QUANTITY: SINGLE PACK
   B. MARKING: BAG TO BE MARKED
      "AMPHENOL RF, 901-3143-1000, AND DATE CODE"

THIRD ANGLE PROJ.

REVISIONS

REV	DESCRIPTION	DATE	ECO	APPR
--	RELEASE TO MFG.	------	------	------
E	REDRAWN IN PRO-E, ADD COD	2/24/14	49780	RV

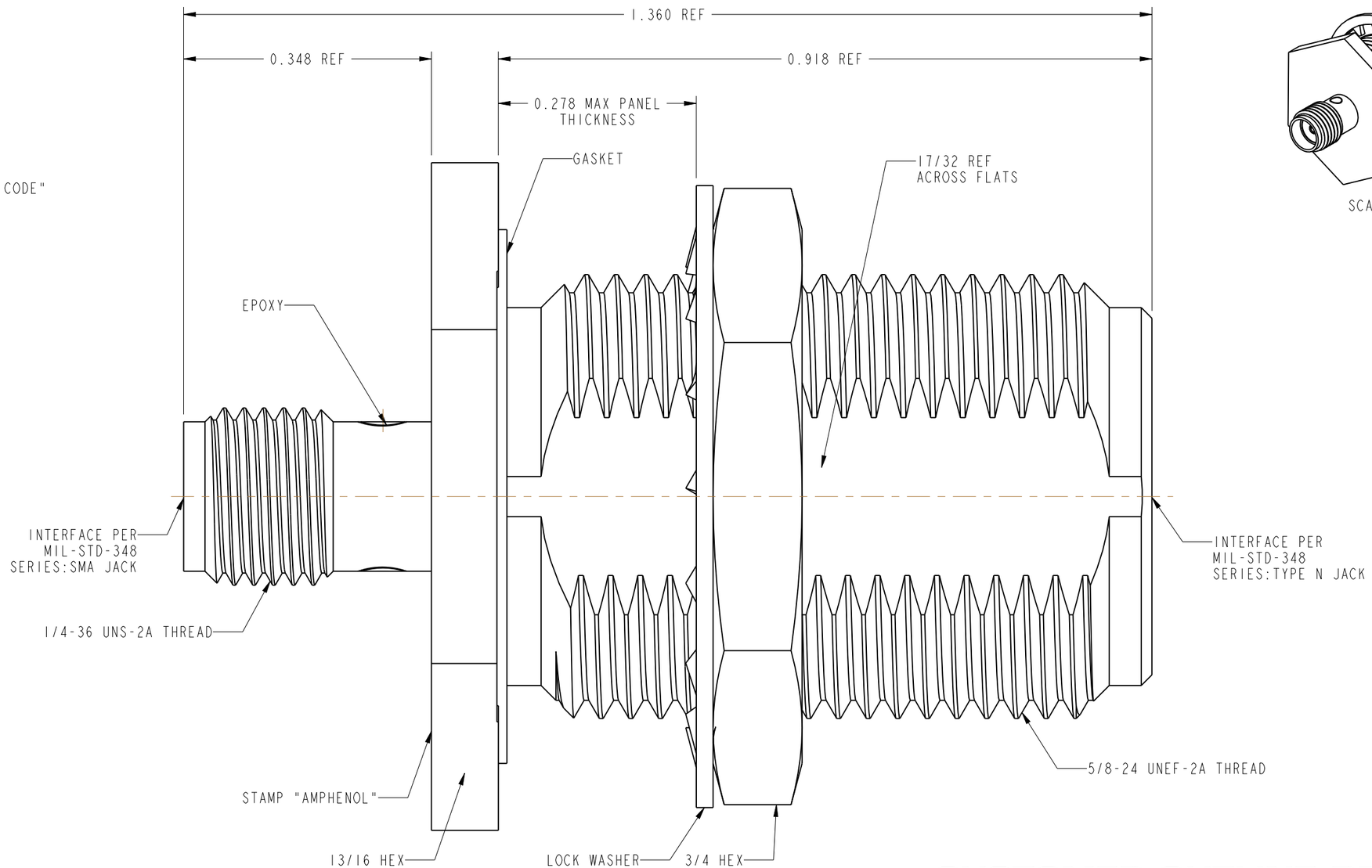

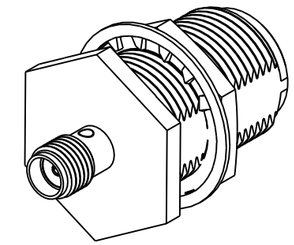

SCALE 1.500

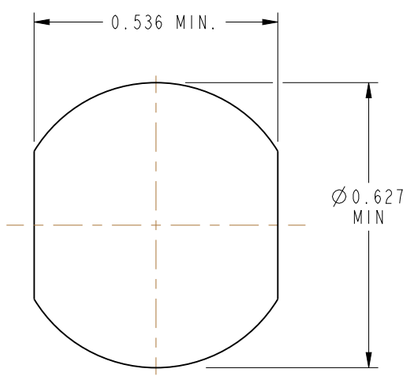

RECOMMENDED MOUNTING HOLE DIMENSIONS

CUSTOMER OUTLINE DRAWING

ALL OTHER SHEETS ARE FOR INTERNAL USE ONLY

UNLESS OTHERWISE SPECIFIED, DIMENSIONS ARE IN INCHES AND TOLERANCES ARE:
2 PLACE DECIMAL ±.015 (0,381 mm) | 3 PLACE DECIMAL ±.005 (0,127 mm) | ANGLES ± 1°

NOTICE - These drawings, specifications, or other data (1) are, and remain the property of Amphenol corp. (2) must be returned upon request; and (3) are confidential and not to be disclosed to any person other than those to whom they are given by Amphenol Corp. the furnishing of these drawings, specifications, or other data by Amphenol Corp., or to any other person to anyone for any purpose is not to be regarded by implication or otherwise in any manner licensing, granting rights to permitting such holder or any other person to manufacture, use or sell any product, process or design, patented or otherwise, that may in any way be related to or disclosed by said drawings, specifications, or other data.

MATERIAL
SEE NOTES

REFERENCE
50-675-6705-89 & 615X-1106-100
EAR # 962172
CONFIGURATION LEVEL: In Work

FINISH

DRAWN RAJAVIJAYAN S	DATE 24-Oct-13	
ENGINEER RAJAVIJAYAN S	DATE 24-Oct-13	
APPROVED K. CAPOZZI	DATE 2/21/14	
CAD FILE		

TITLE
SMA JACK TO TYPE N BHD JACK ADAPTER

SCALE: 6.0:1.0 | SHEET 2 OF 2
DWG SIZE B | REV E

Amphenol RF
www.amphenolrf.com

DRAWING NO. 901-3143-1000
ITEM NO. 901-3143-1000
PART NO. 901-3143-1000