ГК Атлант Инжиниринг – официальный представитель в РФ и СНГ
+7 (495) 109-02-08 sales@bbrc.ru www.bbrc.ru

NOTES:
1. MATERIALS AND FINISHES:
   BODY - BRASS, SILVER PLATING
   CONTACT - BeCu, GOLD PLATING
   INSULATOR - PTFE
   GLASS SEAL : KOVAR STEEL, GOLD PLATING

2. ELECTRICAL:
   A. IMPEDANCE: 50 OHM
   B. DIELECTRIC WITHSTANDING VOLTAGE : 1500 VRMS

3. MECHANICAL:
   A. DURABILITY: 500 CYCLES MIN.
   B. TEMPERATURE RANGE : -65°C TO +165°C
   C. SOLDER JOINT MUST WITHSTAND A LEAKAGE RATE OF 1×10^{-5} cc/sec OF TRACER GAS AT ATMOSPHERIC PRESSURE.

4. PACKAGING:
   A. QUANTITY: SINGLE PACK
   B. MARKING: BAG TO BE MARKED "AMPHENOLRF, 31-4238, AND DATE CODE"

31-4238	
DRAWING NO.	
THIRD ANGLE PROJ.	

REVISIONS

REV	DESCRIPTION	DATE	ECO	APPR
A	OFFICIAL ENG. RELEASE TO MFG.	7/31/70	17637	
S	SEE SHEET 1	9/22/99	43115	CPM
T	SEE SHEET 1	6/29/06	46131	CPM
U	SEE SHEET 1	3/13/12	48970	RAK
V	3/8-32UNEF-2A WAS 5/16-32UNEF-2A; 1/2" HEX NUT WAS 0.495 HEX NUT	6/7/12	49058	RAK

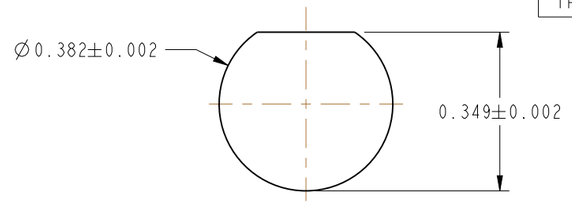

SCALE 3.000

RECOMMENDED MOUNTING HOLE DIMENSIONS

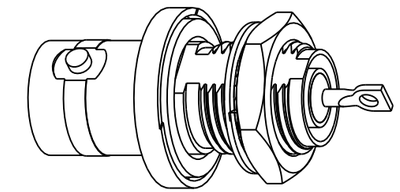

SCALE 2.000

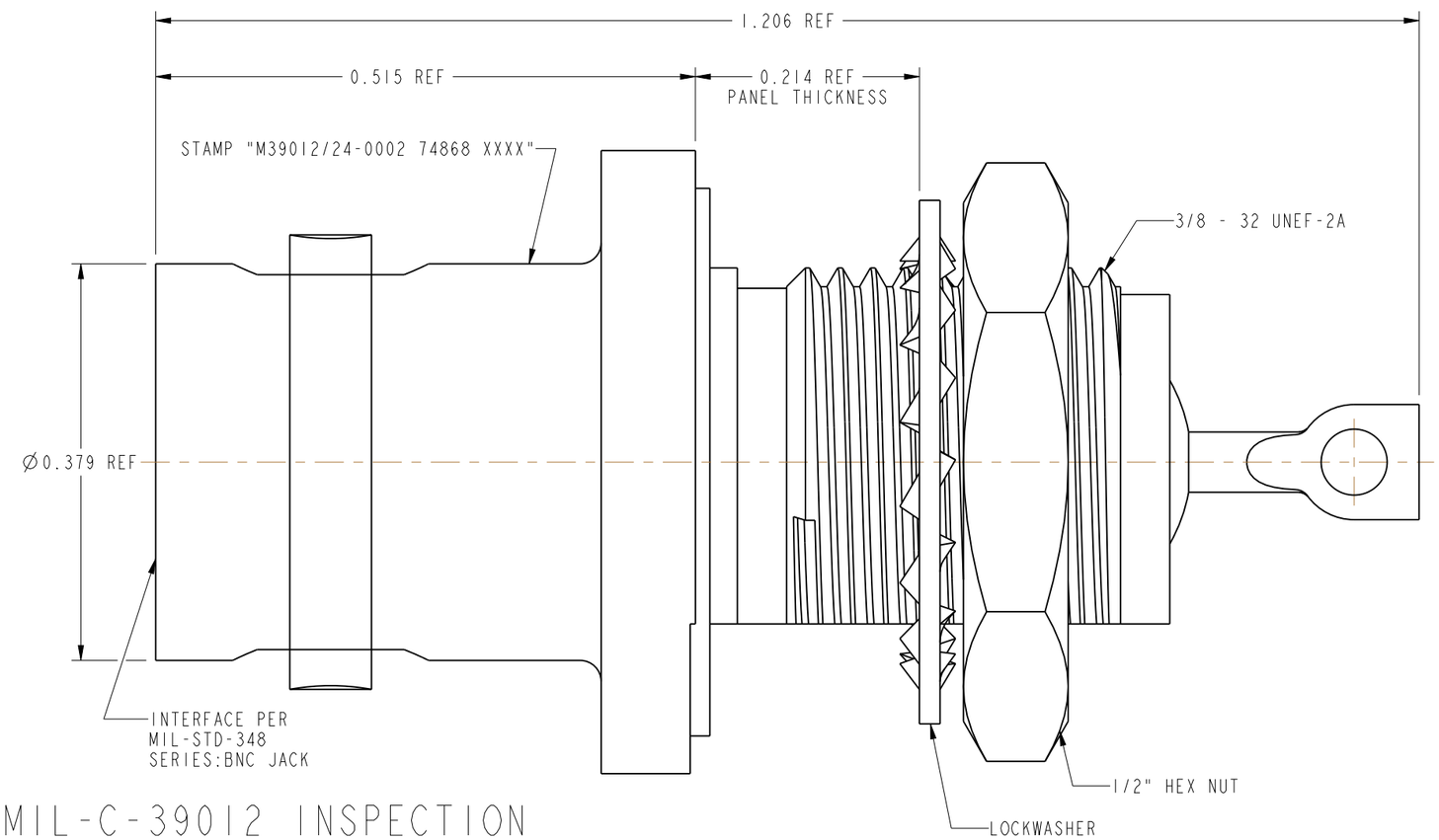

MIL-C-39012 INSPECTION

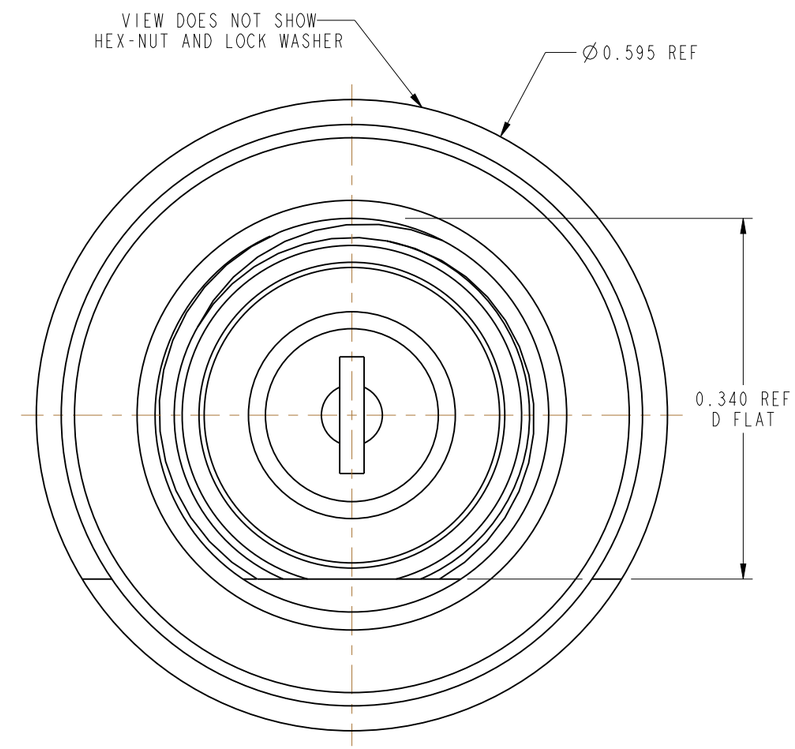

CUSTOMER OUTLINE DRAWING

ALL OTHER SHEETS ARE FOR INTERNAL USE ONLY

UNLESS OTHERWISE SPECIFIED, DIMENSIONS ARE IN INCHES AND TOLERANCES ARE:

2 PLACE DECIMAL	3 PLACE DECIMAL	ANGLES
±.015 (0,381 mm)	±.005 (0,127 mm)	± 1°

NOTICE - These drawings, specifications, or other data (1) are, and remain the property of Amphenol Corp. (2) must be returned upon request; and (3) are confidential and not to be disclosed to any person other than those to whom they are given by Amphenol Corp. The furnishing of these drawings, specifications, or other data by Amphenol Corp., or to any other person to anyone for any purpose is not to be regarded by implication or otherwise in any manner licensing, granting rights or permitting such holder or any other person to manufacture, use or sell any product, process or design, patented or otherwise, that may in any way be related to or disclosed by said drawings, specifications, or other data.

MATERIAL: SEE NOTES

REFERENCE:
MIL-C-39012/24-0002
EPA 802206-51
GEN# ASSYF10_BNC

DRAWN	ABHAYA KISHORE	DATE 23-Feb-12
ENGINEER	T. AUBIN	DATE 08-Sep-99
APPROVED		DATE
CAD FILE		

TITLE: TYPE BNC FRONT MOUNT HERMETIC RECEPTACLE

Amphenol RF
Danbury, CT, USA
Tainan, Taiwan
Shenzhen, China
www.amphenolrf.com

CODE ID	DWG SIZE	DRAWING NO.	REV
74868	B	31-4238	V

SCALE: 7.0:1 SHEET 2 OF 2