ГК Атлант Инжиниринг – официальный представитель в РФ и СНГ
+7 (495) 109-02-08 sales@bbrc.ru www.bbrc.ru

NOTES:
1. MATERIALS AND FINISHES:
   BODY - BRASS, GOLD PLATED
   CONTACT - BRASS, GOLD PLATED
   RING - BERYLLIUM COPPER, GOLD PLATED
   INSULATOR - PTFE

2. FOR CABLE STRIPPING AND ASSEMBLY INSTRUCTIONS SEE 349-50627, SHEET 2. SOLDER CENTER CONTACT AND BODY USING LEAD-FREE SOLDER

THIRD ANGLE PROJ.

REVISIONS

REV	DESCRIPTION	DATE	ECO	APPR
A	RELEASE MFG.	07-Dec-11	41601	BCG
B	ITEM 3 WAS 908-7028	27-Apr-13	43271	CPM
C	CANCELLED	09-Aug-13	49690	J.C
D	CORRECTED SOLDER NOTE	3/24/14	49752	MJD

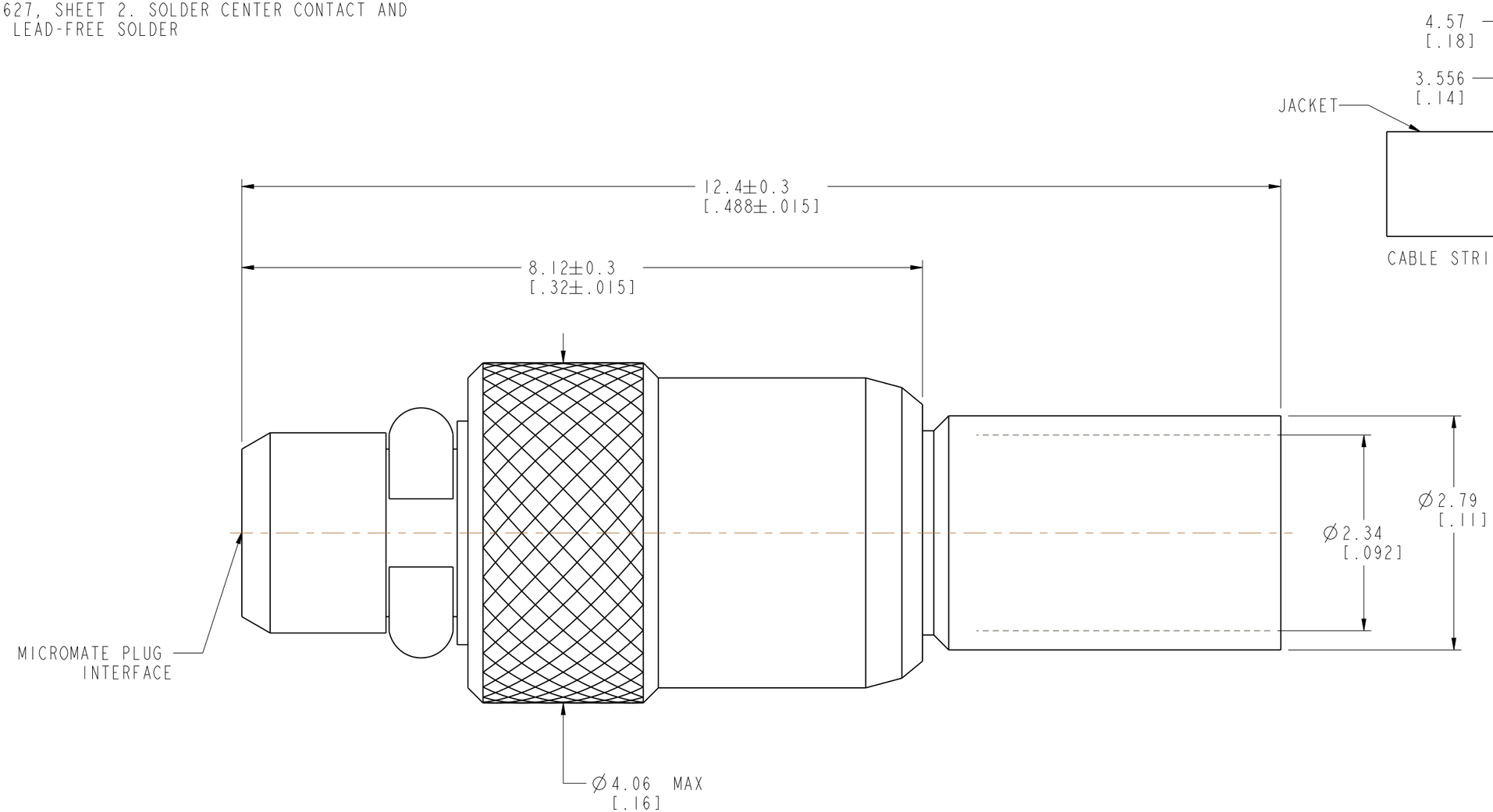

CUSTOMER OUTLINE DRAWING

ALL OTHER SHEETS ARE FOR INTERNAL USE ONLY

UNLESS OTHERWISE SPECIFIED, DIMENSIONS ARE IN METRIC AND TOLERANCES ARE:

<0.5mm	0.5 - 6mm	6 - 30mm	30 - 120mm	ANGLES
± 0.05mm	±0.1mm	±0.2mm	± 0.3mm	±1°

NOTICE - These drawings, specifications, or other data (1) are, and remain the property of Amphenol corp. (2) must be returned upon request; and (3) are confidential and not to be disclosed to any person other than those to whom they are given by Amphenol Corp. the furnishing of these drawings, specifications, or other data by Amphenol Corp., or to any other person to anyone for any purpose is not to be regarded by implication or otherwise in any manner licensing, granting rights to permitting such holder or any other person to manufacture, use or sell any product, process or design, patented or otherwise, that may in any way be related to or disclosed by said drawings, specifications, or other data.

MATERIAL

REFERENCE AND CONFIGURATION LEVEL: In Work

FINISH

DRAWN B.GLEISSNER	DATE 11-Oct-96	
ENGINEER B.GLEISSNER	DATE 11-Oct-96	
APPROVED K. CAPOZZI	DATE 2/25/14	
CAD FILE		

TITLE
MICROMATE PLUG
SOLDER TYPE FOR
Ø.086 S/R CABLE

SCALE: 6.0:1.0 | SHEET 2 OF 2

DWG SIZE B | REV D

Amphenol RF
www.amphenolrf.com

DRAWING NO. 908-41400
ITEM NO. 908-41400
PART NO. 908-41400