NOTES:

1. MATERIALS AND FINISHES:

BODY	- ZINC DIE CAST, TIN PLATED
NUT & WASHER	- BRASS, NICKEL PLATED
CONTACT	- PHOSPHOR BRONZE, TIN PLATED
LOCKWASHER	- PHOSPHOR BRONZE, NICKEL PLATED
CAP	- BRASS, NICKEL PLATED
MEMBRANE SEAL	- SILICONE RUBBER
INSULATOR	- PTFE

2. ELECTRICAL:

A. IMPEDANCE	=	75 OHM, NOMINAL
B. FREQUENCY RANGE	=	DC - 2.15 GHz
C. VSWR(RETURN LOSS)	=	1.43 (15 dB), MAX. AT 1 GHz, 1.93 (10 dB) MAX. AT 2.15 GHz
D. INSERTION LOSS	=	0.2 dB MAX. AT 1 GHz 0.46 dB MAX AT 2.15 GHz
E. CURRENT RATING	=	3A MAX.

3. MECHANICAL:

A. DURABILTIY = 500 CYCLES MIN.
B. TEMPERATURE RANGE = -65° C TO +165° C
C. SHORT DURATION TEMPERATURE = +260° C MAX
D. INTERFACE = MATES WITH PLUGS I.A.W. SCTE
E. IP67 IN THE UNMATED CONDITION

4. PACKAGING:

A. QUANTITY: SINGLE PACK
B. BAG MARKING: AMPHENOL
531-40165
DATE CODE (YYWW)

THIRD ANGLE PROJ.

REVISIONS

REV	DESCRIPTION	DATE	ECO	APPR
A	RELEASE TO MFG	10/6/03	44634	
B	ADDED VSWR SPEC TO 2.15 GHz, ADDED IP67 NOTE	4/16/13	49503	DD
C	ADDED EXPLODED VIEW, REVISED NOTE 7-B & BOM	3/20/15	50386	JN

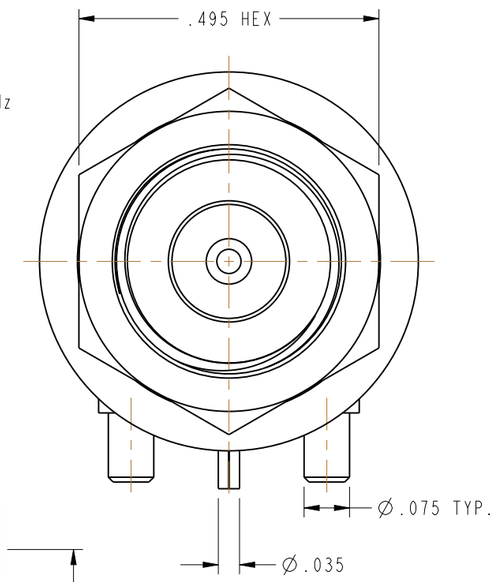

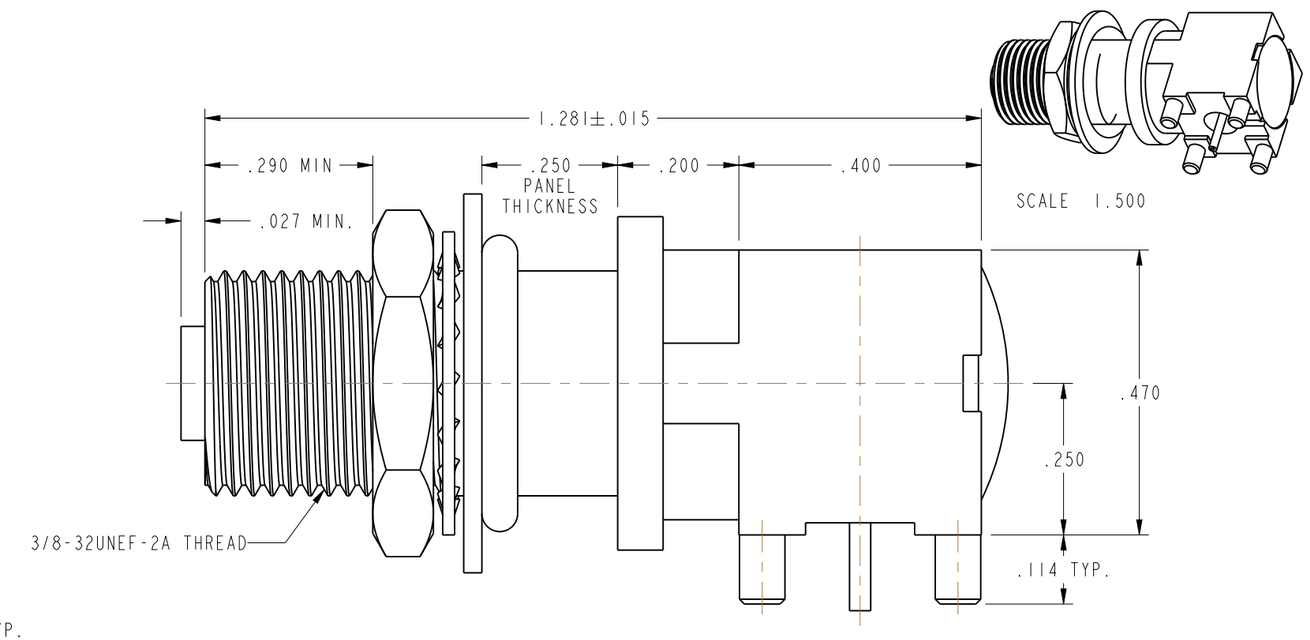

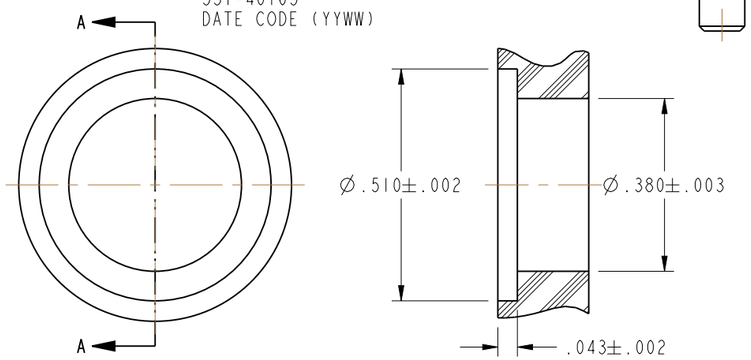

RECOMMENDED PANEL
CUT OUT

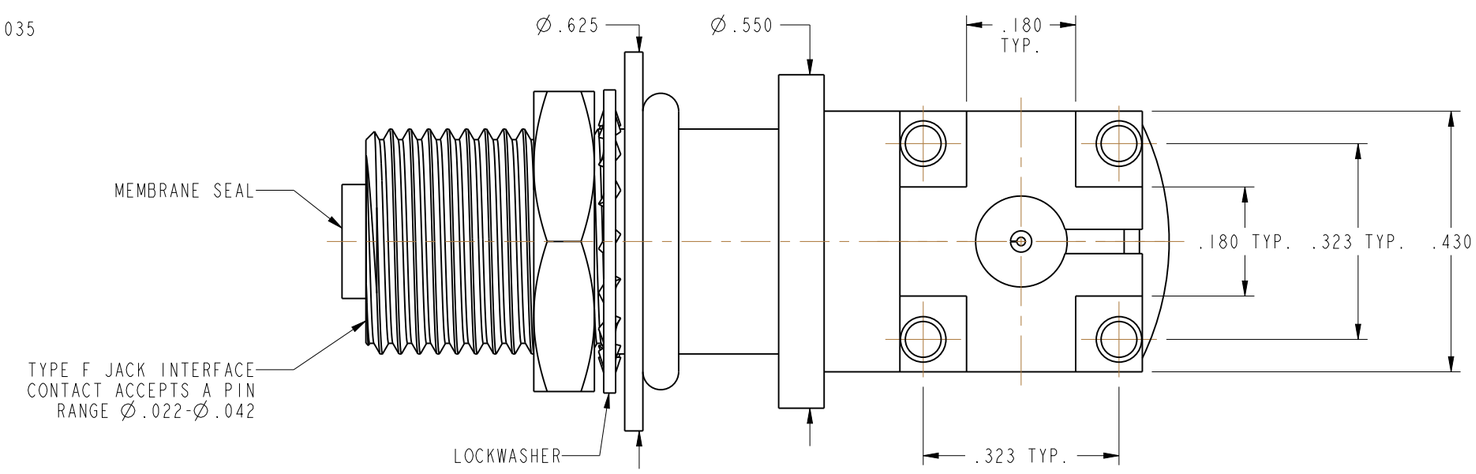

CUSTOMER OUTLINE DRAWING

ALL OTHER SHEETS ARE FOR INTERNAL USE ONLY

UNLESS OTHERWISE SPECIFIED, DIMENSIONS ARE IN INCHES AND TOLERANCES ARE:
2 PLACE DECIMAL ±.015 (0,381 mm) 3 PLACE DECIMAL ±.005 (0,127 mm) ANGLES ± 1°

NOTICE - These drawings, specifications, or other data (1) are, and remain the property of Amphenol corp. (2) must be returned upon request; and (3) are confidential and not to be disclosed to any person other than those to whom they are given by Amphenol Corp. the furnishing of these drawings, specifications, or other data by Amphenol Corp., or to any other person to anyone for any purpose is not to be regarded by implication or otherwise in any manner licensing, granting rights to permitting such holder or any other person to manufacture, use or sell any product, process or design, patented or otherwise, that may in any way be related to or disclosed by said drawings, specifications, or other data.

MATERIAL SEE NOTES	DRAWN D.DAVE	DATE 22-Mar-13	TITLE F, JACK, R/A PCB MOUNTED, MOISTURE SEALED
	ENGINEER B.C. GLEISSNER	DATE 23-Apr-03	
REFERENCE 968 AND 616X-1107-100	APPROVED K. CAPOZZI	DATE 4/16/13	SCALE: 4.0:1.0 SHEET 2 OF 2
CONFIGURATION LEVEL:	CAD FILE		DWG SIZE B REV B
FINISH			

Amphenol RF
www.amphenolrf.com

DRAWING NO. 531-40165
ITEM NO. 531-40165
PART NO. 531-40165

Downloaded from Arrow.com.