ГК Атлант Инжиниринг – официальный представитель в РФ и СНГ
+7 (495) 109-02-08 sales@bbrc.ru www.bbrc.ru

THIRD ANGLE PROJ.

REVISIONS				
REV	DESCRIPTION	DATE	ECO	APPR
A	RELEASE TO MFG.	18-Apr-11	-----	JY

NOTES:

1. MATERIALS AND FINISHES:

   BODY - ZINC ALLOY, MATTE TIN PLATED (.000100" MIN.)
   SPRING CONTACT - BERYLLIUM COPPER, MATTE TIN PLATED (.000100" MIN.)
   CONTACT - PHOSPHOR BRONZE, SELECTIVE GOLD PLATED (.000030" MIN.)
   FERRULE - SOFT COPPER, NICKEL PLATED (.000100" MIN.)
   INSULATOR - PTFE, COLOR: WHITE
   CLIP - PBT, COLOR: YELLOW
   HOUSING - PPE+PS, COLOR: SEE TABLE BELOW

   C04 CONNECTOR SUB-ASSEMBLY P/N: 903-848P-51S

   CONTACTS IS SUPPLIED SEPARATELY AS P/N: FKCP03302 (5,000 PCS. REEL)
   C04 FERRULE MAY BE PURCHASED SEPARATELY AS P/N: 923-10081 (100 PCS. TRAY)
   CABLE DEFINITIONS PER AMPHENOL REPORT DE825

2. ELECTRICAL:

   A. IMPEDANCE = 50 OHM, NOMINAL
   B. FREQUENCY RANGE = DC - 6 GHz,(OPTIMIZED FOR DC-4 GHz)
   C. VSWR = 1.4 (-15.6 dB), MAX.(DC-2 GHz)
   (MATED PAIR) 1.5 (-13.9 dB), MAX.(2-3 GHz)
   D. D.W.V. = 800 VRMS, MIN.

3. MECHANICAL:

   A. DURABILITY = 100 CYCLES MIN.
   B. TEMPERATURE RANGE = -40° C TO +85° C
   C. MECHANICAL PULL = 110 N MIN.

4. CONNECTOR ASSEMBLY:

   A. SEE 349-50767 FOR CONNECTOR ASSEMBLY INSTRUCTIONS
   B. SEE 349-50748 OR 349-50750 FOR RF CONTACT TOOLING
   C. SEE 349-50747 FOR RF CONTACT CRIMPING CRITERIA

5. PACKAGING:

   A. QUANTITY: TRAY PACK
   B. PACKAGING TO BE MARKED: AMPHENOL RF
   3FAH-NXSJ-C04W6
   DATE CODE

6. ALL DIMENSIONS MECHANICAL & ELECTRICAL DESIGN COMPLY WITH DIN 72594-1 AND USCAR-18 SPEC.

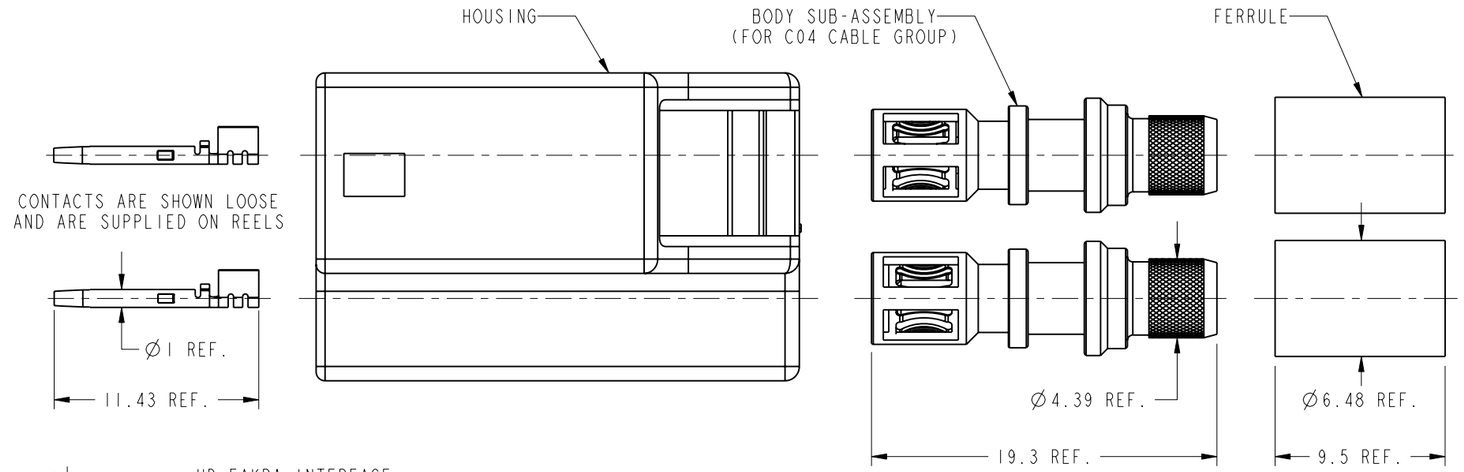

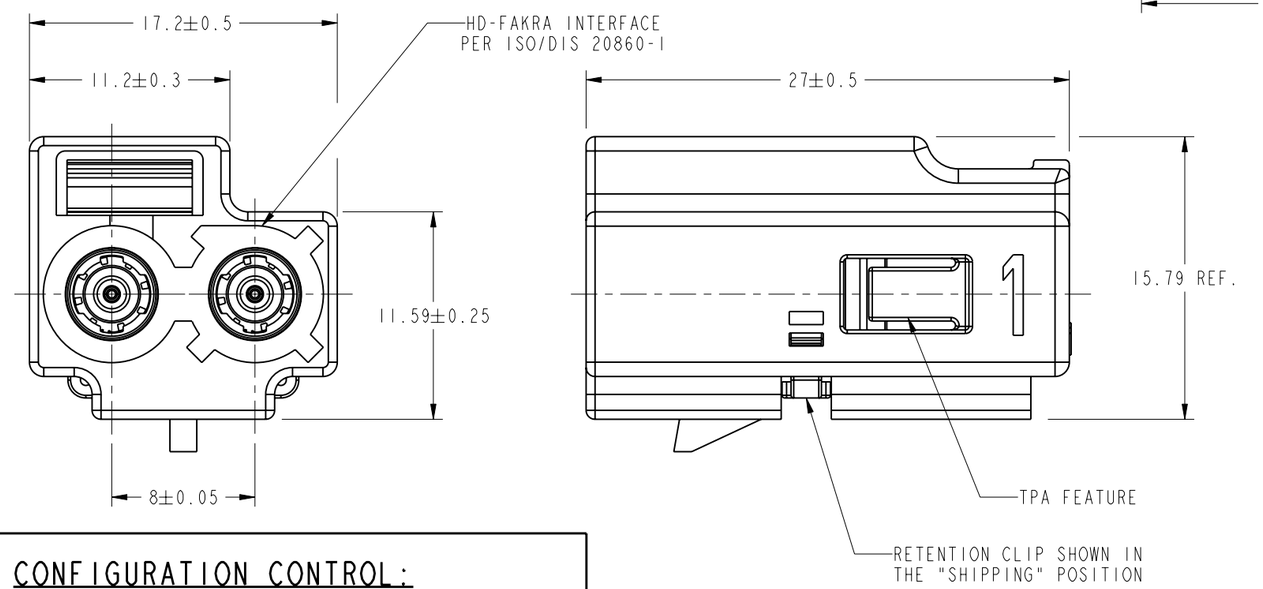

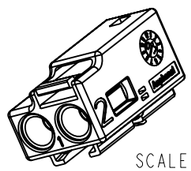

SCALE 1.000

SCALE 1.000

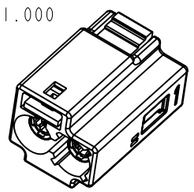

CODING	DRAWING NO.	COLOR
A	3FAH-NASJ-C04W6	JET BLACK
B	3FAH-NBSJ-C04W6	CREAM
C	3FAH-NCSJ-C04W6	SIGNAL BLUE
D	3FAH-NDSJ-C04W6	CLARET VIOLET
E	3FAH-NESJ-C04W6	LEAF GREEN
F	3FAH-NFSJ-C04W6	NUT BROWN
G	3FAH-NGSJ-C04W6	BLUE GREY
H	3FAH-NHSJ-C04W6	HEATHER VIOLET
I	3FAH-NISJ-C04W6	BEIGE
K	3FAH-NKSJ-C04W6	CURRY
L	3FAH-NLSJ-C04W6	CARMINE RED
M	3FAH-NMSJ-C04W6	PASTEL ORANGE
N	3FAH-NNSJ-C04W6	PASTEL GREEN
Z	3FAH-NZSJ-C04W6	WATER BLUE

CONFIGURATION CONTROL:
NO CHANGES PERMITTED TO DRAWING WITHOUT PPAP QUALIFIED CUSTOMER APPROVAL

CUSTOMER OUTLINE DRAWING

ALL OTHER SHEETS ARE FOR INTERNAL USE ONLY

UNLESS OTHERWISE SPECIFIED, DIMENSIONS ARE IN METRIC AND TOLERANCES ARE:

<0.5mm	0.5 - 6mm	6 - 30mm	30 - 120mm	ANGLES
± 0.05mm	±0.1mm	±0.2mm	± 0.3mm	±1°

NOTICE - These drawings, specifications, or other data (1) are, and remain the property of Amphenol corp. (2) must be returned upon requiest; and (3) arre confidential and not to be disclosed to any person other than those to whom they are given by Amphenol Corp. the funishing of these drawings, specifications, or other data by Amphenol Corp., or to any other person to anyone for any purpose is not to be regarded by implicatioin or otherwise in any manner licensing, granting rights to permitting such holder or any other sperson to manufacture, use or sell any product, process or design, patented or otherwsie, that may in any way be related to or disclosed by said drawings, specifications, or other data.

MATERIAL
-

REFERENCE
EAR # 3306 AND REF: 2FAHENXSJ-C04W6

CONFIGURATION LEVEL:

FINISH

DRAWN K.LIAO	DATE 18-Apr-11	
ENGINEER J.YANG	DATE 18-Apr-11	
APPROVED S.HSIEH	DATE 19-Apr-11	
CAD FILE I:\FAKRA\3FAH-NXSJ-C04W6		

TITLE
2-WAY HD-FAKRA JACK, CLOSED-ENTRY (GEN 3.0), 2-C04 PORTS (CONTACT SOLD SEPARATELY)

SCALE: 3.0:1.0 | SHEET 2 OF 2
DWG SIZE B | REV A

Amphenol RF
Danbury CT USA, Tainan, Taiwan, Shenzhen, China
www.amphenolrf.com

DRAWING NO. 3FAH-NXSJ-C04W6
ITEM NO. 3FAH-NXSJ-C04W6
PART NO. 3FAH-NXSJ-C04W6