ГК Атлант Инжиниринг – официальный представитель в РФ и СНГ
+7 (495) 109-02-08 sales@bbrc.ru www.bbrc.ru

THIRD ANGLE PROJ.

| REVISIONS | | | | |
|---|---|---|---|---|
| REV | DESCRIPTION | DATE | ECO | APPR |
| A | RELEASE TO MFG. | 29-Dec-09 | ----- | SH |

NOTES:

1. MATERIALS AND FINISH (IN MICRO-INCHES)

   BODY = ZINC DIECAST (PER ASTM B86, UNS Z33520) , MATTE TIN PL. 100 MIN. THICK OVER NICKEL PL. 100 MIN. THICK OVER COPPER PL.(250 MIN./300 MAX.) THICK
   INSULATOR = PTFE PER ASTM D1710, COLOR: NATURAL
   HOUSING = PPE+PS, COLOR: PER TABLE
   FERRULE = COPPER (PER ASTM B15, UNS C11000 OR C12200) NICKEL PL. 100 MIN. THICK OVER COPPER STRIKE

   CONTACT SUPPLIED SEPARATELY AS P/N: FKCP03301A (5,000 PCS. REEL)
   C65 FERRULE MAY BE PURCHASED SEPARATELY AS P/N: FKFR01101
   CABLE DEFINITIONS PER AMPHENOL REPORT DE825

2. ELECTRICAL:

   A. IMPEDANCE: 50 OHM, NOMINAL
   B. FREQUENCY RANGE: DC-3.0 GHz
   C. VSWR(RETURN LOSS): 1.400 (-15.6dB), MAX. (DC-2.0 GHz)
      (MATED PAIR): 1.500 (-13.9dB), MAX. (2.0-3.0 GHz)
   D. D.W.V.: 800 VRMS, MIN.

3. MECHANICAL:

   A. DURABILITY: 100 CYCLES MIN.
   B. TEMPERATURE RANGE: -40° C TO 85° C
   C. USCAR-17 COMPLIANT
   D. INTERFACE PER DIN 72594-1

4. PACKAGING:

   A. QUANTITY: TRAY PACK
   B. MARKING: TRAY TO BE MARKED "AMPHENOL, 3FA1-NXSJ-C65W0, AND DATE CODE"

5. CABLE ASSEMBLY INSTRUCTIONS PER 349-50801

**CONFIGURATION CONTROL:**
NO CHANGES PERMITTED TO DRAWING WITHOUT PPAP QUALIFIED CUSTOMER APPROVAL

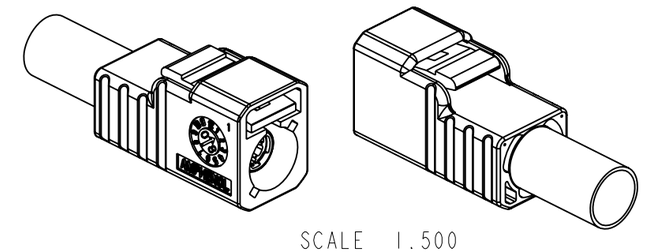


SCALE 1.500

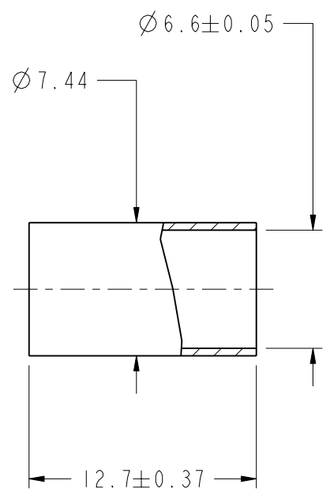


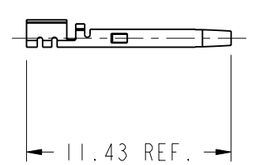


CONTACT SHOWN FOR REFERENCE ONLY

SECTION A-A

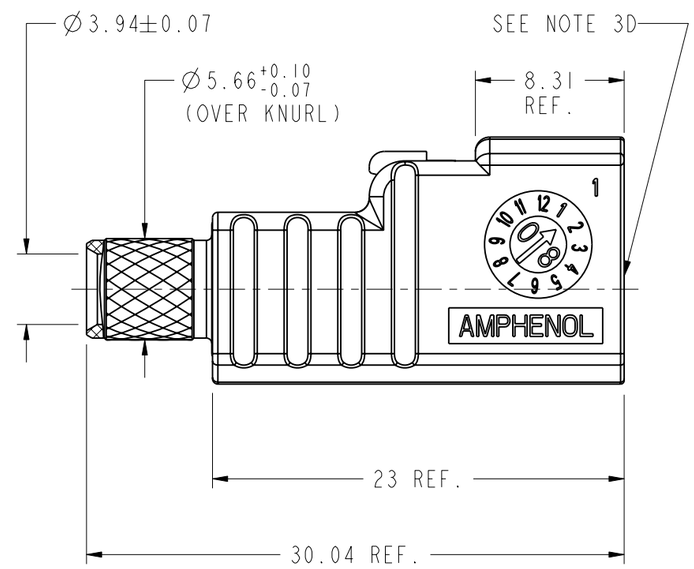


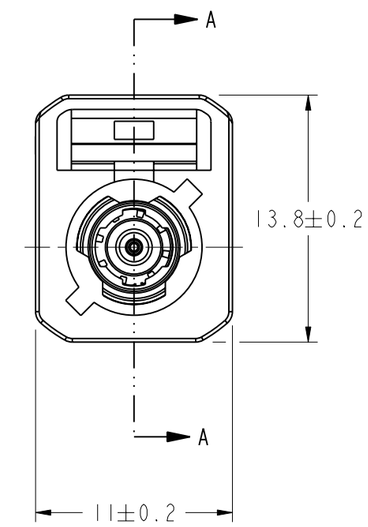


SEE TABLE FOR PART NUMBER, COLOR, AND KEY CODING

- "C" KEYING SHOWN -

| CODING | DRAWING NO. | COLOR | RAL NO. |
|---|---|---|---|
| A | 3FA1-NASJ-C65W0 | JET BLACK | 9005 |
| B | 3FA1-NBSJ-C65W0 | CREAM | 9001 |
| C | 3FA1-NCSJ-C65W0 | SIGNAL BLUE | 5005 |
| D | 3FA1-NDSJ-C65W0 | CLARET VIOLET | 4004 |
| E | 3FA1-NESJ-C65W0 | LEAF GREEN | 6002 |
| F | 3FA1-NFSJ-C65W0 | NUT BROWN | 8011 |
| G | 3FA1-NGSJ-C65W0 | BLUE GREY | 7031 |
| H | 3FA1-NHSJ-C65W0 | HEATHER VIOLET | 4003 |
| I | 3FA1-NISJ-C65W0 | BEIGE | 1001 |
| K | 3FA1-NKSJ-C65W0 | CURRY | 1027 |
| L | 3FA1-NLSJ-C65W0 | CARMINE RED | 3002 |
| M | 3FA1-NMSJ-C65W0 | PASTEL ORANGE | 2003 |
| N | 3FA1-NNSJ-C65W0 | PASTEL GREEN | 6019 |
| Z | 3FA1-NZSJ-C65W0 | WATER BLUE | 5021 |

# CUSTOMER OUTLINE DRAWING

ALL OTHER SHEETS ARE FOR INTERNAL USE ONLY

UNLESS OTHERWISE SPECIFIED, DIMENSIONS ARE IN METRIC AND TOLERANCES ARE:

| <0.5mm | 0.5 - 6mm | 6 - 30mm | 30 - 120mm | ANGLES |
|---|---|---|---|---|
| ± 0.05mm | ±0.1mm | ±0.2mm | ± 0.3mm | ±1° |

NOTICE - These drawings, specifications, or other data (1) are, and remain the property of Amphenol corp. (2) must be returned upon requiest; and (3) are confidential and not to be disclosed to any person other than those to whom they are given by Amphenol Corp. the funishing of these drawings, specifications, or other data by Amphenol Corp., or to any other person to anyone for any purpose is not to be regarded by implication or otherwise in any manner licensing, granting rights to permitting such holder or any other sperson to manufacture, use or sell any product, process or design, patented or otherwsie, that may in any way be related to or disclosed by said drawings, specifications, or other data.

MATERIAL

REFERENCE
EAR # 2865 AND

CONFIGURATION LEVEL: RELEASE

FINISH

| | | |
|---|---|---|
| DRAWN A.LIU | DATE 23-Sep-08 | |
| ENGINEER J.YANG | DATE 23-Sep-08 | |
| APPROVED B.C.GLEISSNER | DATE 23-Sep-08 | |
| CAD FILE I:\FAKRA\3FA1-NXSJ-C65W0 | | |

TITLE
GEN 3.0 FAKRA JACK,
C65 CABLE GROUP,
TAPE AND REEL CONTACT
(SUPPLIED SEPARATELY)

SCALE: 3.0:1.0 | SHEET 2 OF 2
DWG SIZE B | REV A

Amphenol RF
Danbury CT USA, Tainan, Taiwan, Shenzhen, China
www.amphenolrf.com

DRAWING NO. 3FA1-NXSJ-C65W0
ITEM NO. 3FA1-NXSJ-C65W0
PART NO. 3FA1-NXSJ-C65W0