REV.	DATE	ECR NO.	DESCRIPTION
NC	05/11/10	XXXXXX	INITIAL RELEASE
A	02/15/12	2282	ADD NOTE 3

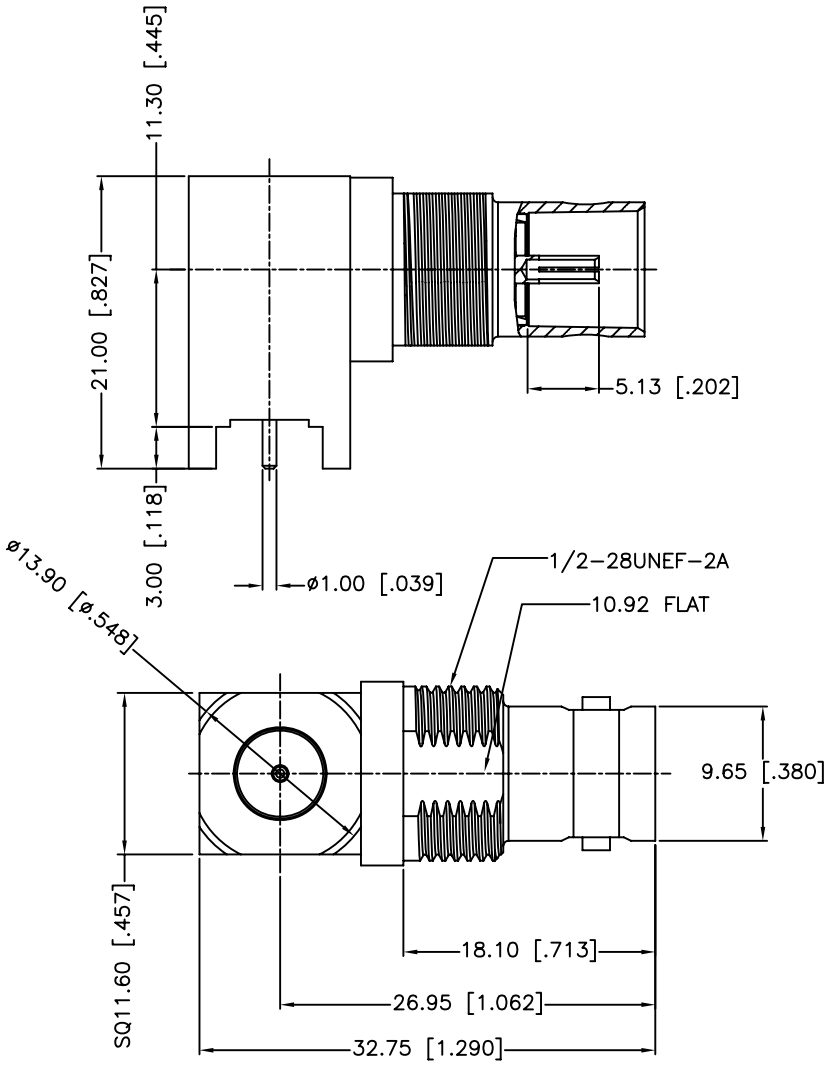

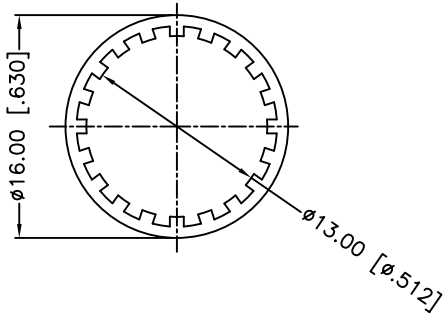

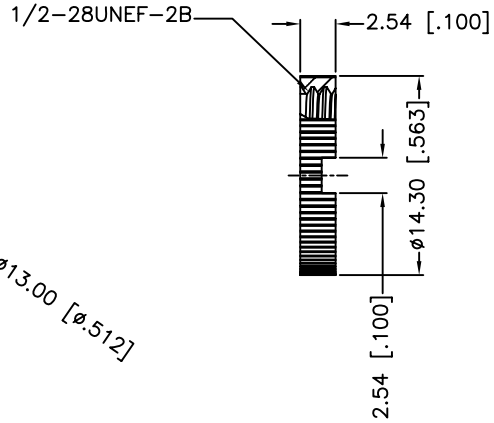

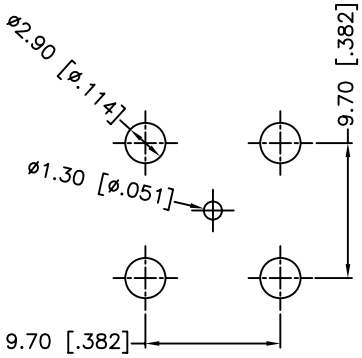

RECOMMENDED PCB LAYOUT

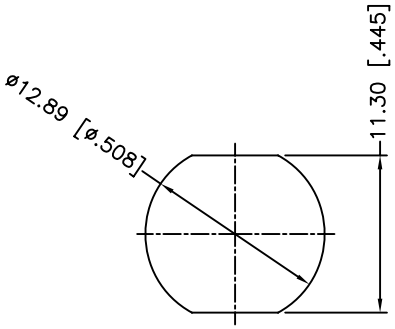

RECOMMENDED MOUNTING HOLE

NOTES:
1. IMPEDENCE:75 OHM
2. VSWR: 1.15 @ 3GHz
3. MAX.PANEL THICKNESS=4mm

	DESCRIPTION	MATERIAL	FINISH	QTY
7	LOCK RING	BRASS	NICKEL	1
6	KNURL NUT	BRASS	NICKEL	1
5	LOCK WASHER	BRASS	NICKEL	1
4	INSULATOR	PTFE	NATURAL	1
3	INSULATOR	PTFE	NATURAL	1
2	CONTACT PIN	BERYLLIUM COPPER	GOLD	1
1	BODY	BRASS	NICKEL	1

UNLESS OTHERWISE SPECIFIED DIMENSIONS ARE IN MILLIMETERS. DIMENSIONS IN [ ] ARE IN INCHES AND FOR CUSTOMER REFERANCE ONLY.

UNLESS OTHERWISE SPECIFIED TOLERANCES FOR MILLIMETERS ARE:
0.5 – 8mm ± 0.20mm
8 – 30mm ± 0.40mm
30 – 120mm ± 0.50mm

UNLESS OTHERWISE SPECIFIED TOLERANCES FOR INCHES ARE:
.020 – .315 = ± 0.007"
.315 – 1.180 = ± 0.015"
1.180 – 4.724 = ± 0.020"

DO NOT SCALE DRAWING

APPROVALS		DATE
DRAWN	M.ZHANG	02/15/12
CHECKED		
ISSUED		
SHEET	1 OF 1	

CAD FILE Y:/CONNEX/112804.DWG

Amphenol Connex

PART DESCRIPTION
BNC BULKHEAD R/A PCB
MOUNT JACK(75 OHM)

PART NO. 112804

DWG. NO. 112804 | REV. A | SIZE A | SCALE NA

Downloaded from Arrow.com.