Downloaded from Arrow.com.

REVISIONS		
ISS	ZONE	DESCRIPTION\PER REQUEST\DATE
A1	D-3	ADDED 2.3 ±0.1 \N/A\12-04-01'
A2	B-6	ADDED KEY CODING\N/A\12-26-01'
A3	B-6	CANCELLED L AND M KEY CODING\N/A\02-13-03'

CONFIGURATION CONTROL:
NO CHANGES PERMITTED TO DRAWING WITHOUT PPAP QUALIFIED CUSTOMER APPROVAL

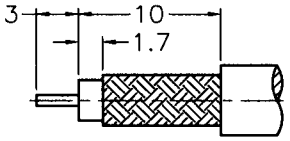

RECOMMENDED CABLE STRIPPING DIM'S

1. CRIMPED FERRULE HEX CRIMP SIZE .213"
2. CRIMPED CONTACT PIN AFM8 ADJUST TO 6 OR 7 POSITIONER K1470

REMARK:1. NO.2 MUST WITHSTAND A 4 lbs. MIN. PUSHOUT FORCE FROM NO.1 AFTER STAKING OPERATION
2. REMARK 1 IS MAINTAINED BY STAMPING THE FOUR POINTS SHOWN ON THE DRAWING WITHOUT PUNCTURING NO.1

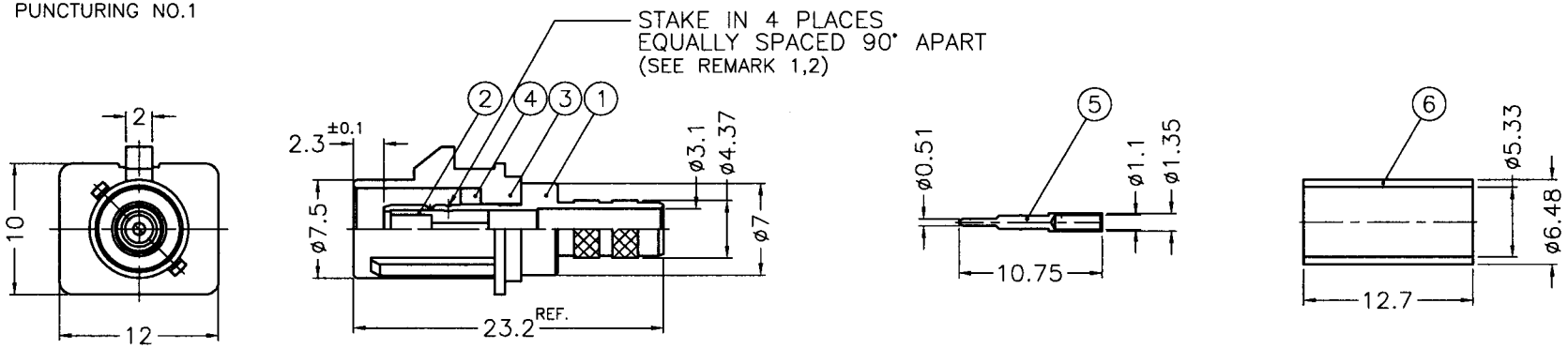

NOTES: FINISH (PLATING THICKNESS IN MICRO-INCHES)
1. BRASS PER QQ-B-626, ALLOY 360, 1/2 H ; JIS H3250 C 3604BD OR EQUIVALENT
2. NICKEL PL. 60 MIN. THICK OVER OPTIONAL COPPER STRIKE
3. GOLD PL. 30 MIN. THICK OVER NICKEL PL. 100 MIN. THICK OVER OPTIONAL COPPER STRIKE
4. TEFLON MIL-P-19468 OR EQUIVALENT
5. COPPER PER ASTM B-75 ALLOY C12200 OR EQUIVALENT
6. PBT(WITH 15% GLASS FIBER) PER CHANG CHUN GRADE 4115202 OR EQUIVALENT

TABLE

KEY CODING	PART NO.	DRAWING NO.	ITEM NO.	LOCK COVER
A	FA1-NASP-C04-1	FK1121AW-008-NT30G-50	FK1121AAA57NC5F	FKLC10201A
B	FA1-NBSP-C04-1	FK1121BW-008-NT30G-50	FK1121AAB57NC5F	FKLC10202A
C	FA1-NCSP-C04-1	FK1121CW-008-NT30G-50	FK1121AAC57NC5F	FKLC10203A
D	FA1-NDSP-C04-1	FK1121DW-008-NT30G-50	FK1121AAD57NC5F	FKLC10204A
E	FA1-NESP-C04-1	FK1121EW-008-NT30G-50	FK1121AAE57NC5F	FKLC10205A
F	FA1-NFSP-C04-1	FK1121FW-008-NT30G-50	FK1121AAF57NC5F	FKLC10206A
G	FA1-NGSP-C04-1	FK1121GW-008-NT30G-50	FK1121AAG57NC5F	FKLC10207A
H	FA1-NHSP-C04-1	FK1121HW-008-NT30G-50	FK1121AAH57NC5F	FKLC10208A
I	FA1-NISP-C04-1	FK1121IW-008-NT30G-50	FK1121AAI57NC5F	FKLC10209A
K	FA1-NKSP-C04-1	FK1121KW-008-NT30G-50	FK1121AAK57NC5F	FKLC10210A
Z	FA1-NZSP-C04-1	FK1121ZW-008-NT30G-50	FK1121AAZ57NC5F	FKLC10211A

NO.	DESCRIPTION	MATERIAL	FINISH	Q'TY	DRAWING NO.
6	FERRULE	NOTE 5	NOTE 2	1	FKFR00201A
5	CONTACT PIN	NOTE 1	NOTE 3	1	FKCP00301A
4	RING	NOTE 1	NOTE 2	1	FKLR00101A
3	LOCK COVER	NOTE 6		1	SEE TABLE
2	INSULATOR	NOTE 4	NATURAL	1	FKNS00401A
1	BODY	NOTE 1	NOTE 2	1	FKBD00401A

DIMENSIONS ARE IN MILLIMETERS
UNLESS OTHERWISE SPECIFIED TOLERANCES
0.5-6 = ±0.2
6-30 = ±0.4
30-120 = ±0.6
120-315 = ±1
315-1000 = ±1.6
1000-2000 = ±2.4

SCALE 2/1 | ISSUE A3

PART NO. FA1-NXSP-C04-1
APPROVED MARK CHU DATE 05-02-03'
CHECKED COASE WANG DATE 05-02-03'
DRAWN LILY CHIU DATE 05-02-03'
FILE NO.F:\DWG\FK\1121XX\008\50\NT30G-A3-PPAP

Amphenol
Danbury,CT,USA-Tainan,Taiwan-Shenzhen,China

TITLE FAKRA SMB CRIMP PLUG (FOR RG-58A/U, 58C/U CABLE)
DRAWING NO. FK1121XX-008-NT30G-50
ITEM NO. FK1121AAX57NC5F