REVISIONS		
ISS	ZONE	DESCRIPTION\PER REQUEST\DATE

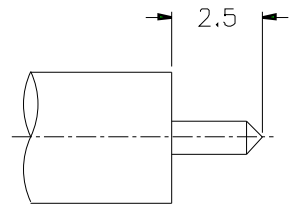

RECOMMENDED
CABLE STRIPPING DIM'S

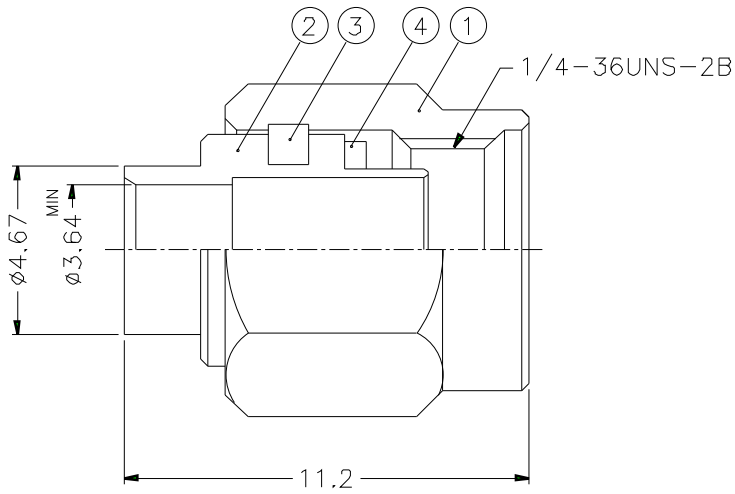

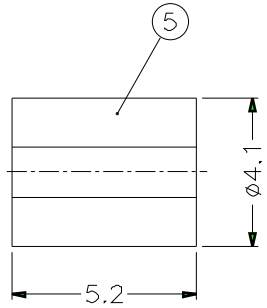

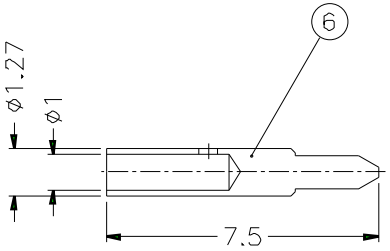

NOTES: FINISH (PLATING THICKNESS IN MICRO-INCHES)
1. BRASS PER QQ-B-626
2. GOLD PL. 3 MIN. THICK OVER NICKEL PL. 100 MIN. THICK OVER COPPER STRIKE
3. BERYLLIUM COPPER PER QQ-C-530
4. GOLD PL. 50 MIN. THICK OVER NICKEL PL. 100 MIN. THICK OVER COPPER STRIKE
5. TEFLON MIL-P-19468

NO.	DESCRIPTION	MATERIAL	FINISH	Q'TY	DRAWING NO.
6	CONTACT PIN	NOTE 1	NOTE 4	1	SMA5081-6-127/1
5	INSULATOR	NOTE 5	NATURAL	1	SMA5081-5T-50
4	GASKET	SILICONE	RED	1	GS-6/43X06
3	RETAINER RING	NOTE 3	NATURAL	1	SMA5000-4-B
2	BODY	NOTE 1	NOTE 2	1	SMA5081-2-467/364-A
1	SHELL	NOTE 1	NOTE 2	1	SMA5000-1-C

DIMENSIONS ARE IN MILLIMETERS

UNLESS OTHERWISE SPECIFIED TOLERANCES
0.5-6 = ±0.2
6-30 = ±0.4
30-120 = ±0.6
120-315 = ±1
315-1000 = ±1.6
1000-2000 = ±2.4

SCALE 5/1 | ISSUE A

PART NO. SMA1181A1-3GT50G-10-50

APPROVED — DATE 10-11-01'

CHECKED — DATE 10-11-01'

DRAWN — DATE 10-11-01'

FILE NO

Amphenol

TITLE
SMA SEMI-RIGID PLUG

DRAWING NO.
KJ-SMA1181A1-3GT50G-.141-50

ITEM NO.