ГК Атлант Инжиниринг – официальный представитель в РФ и СНГ
+7 (495) 109-02-08 sales@bbrc.ru www.bbrc.ru

THIRD ANGLE PROJ.

REVISIONS				
REV	DESCRIPTION	DATE	ECO	APPR
A	RELEASE TO MFG.	7/31/07	46687	NMV

NOTES:
1. MATERIALS AND FINISHES:
   - BODY - BRASS, COPPER-TIN-ZINC PLATING (2 µm MIN THICK)
   - CONTACT - PHOSPHOROUS BRONZE, SILVER PLATING (5 µm THICK)
   - INSULATOR- PTFE
   - O-RING -SILICONE RUBBER.
2. ELECTRICAL:
   - A. IMPEDANCE: 50 OHM
   - B. FREQUENCY RANGE: DC - 3 GHz
   - C. VSWR: 1.2 MAX FROM .8 GHz - 2.2 GHz.
   - D. -125dBm 3RD ORDER PIM W/(2) +43 dBm TONES
3. MECHANICAL:
   - A. DURABILITY: 500 CYCLES MIN.
   - B. TEMPERATURE RANGE: -55° C TO 155° C
   - C. ENVIRONMENTAL SEALING PER IP68,MATED AND UNMATED.
   - D. CENTER CONTACT RETENTION:
     AXIAL RETENTION: 200 N MIN.
     RADIAL FORCE: .02N-M MIN.
4. PACKAGING:
   - A. QUANTITY: SINGLE PACK
   - B. MARKING: BAG TO BE MARKED
     "135-0018-01,WWYY
     AMPHENOLRF,716-200"
   - C. INTERFACE SHALL BE COVERED WITH PROTECTIVE CAP

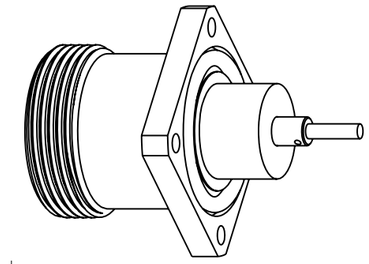

SCALE 1.000

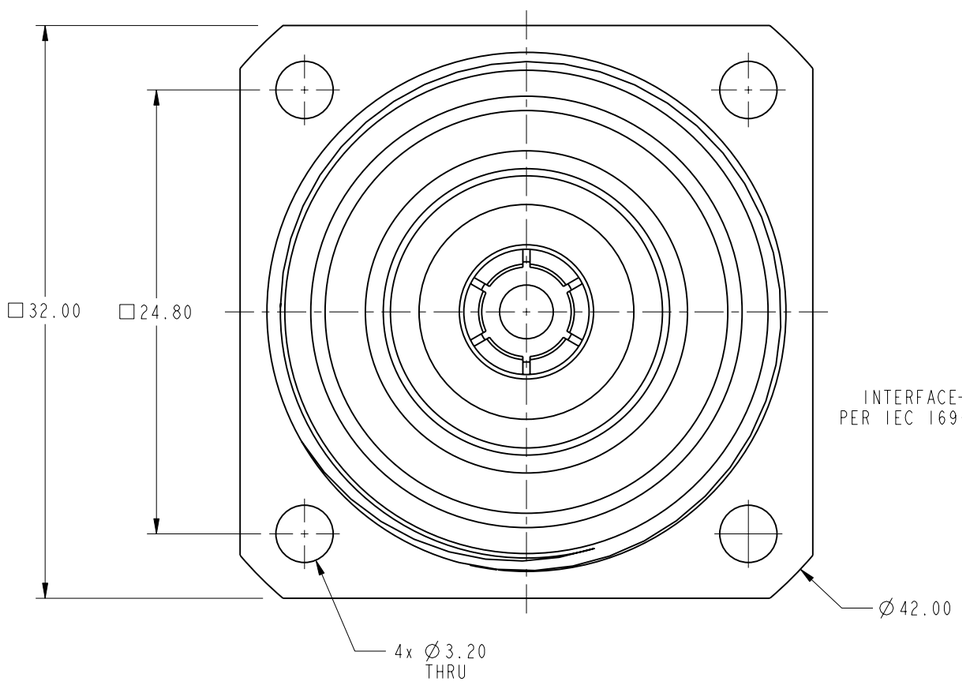

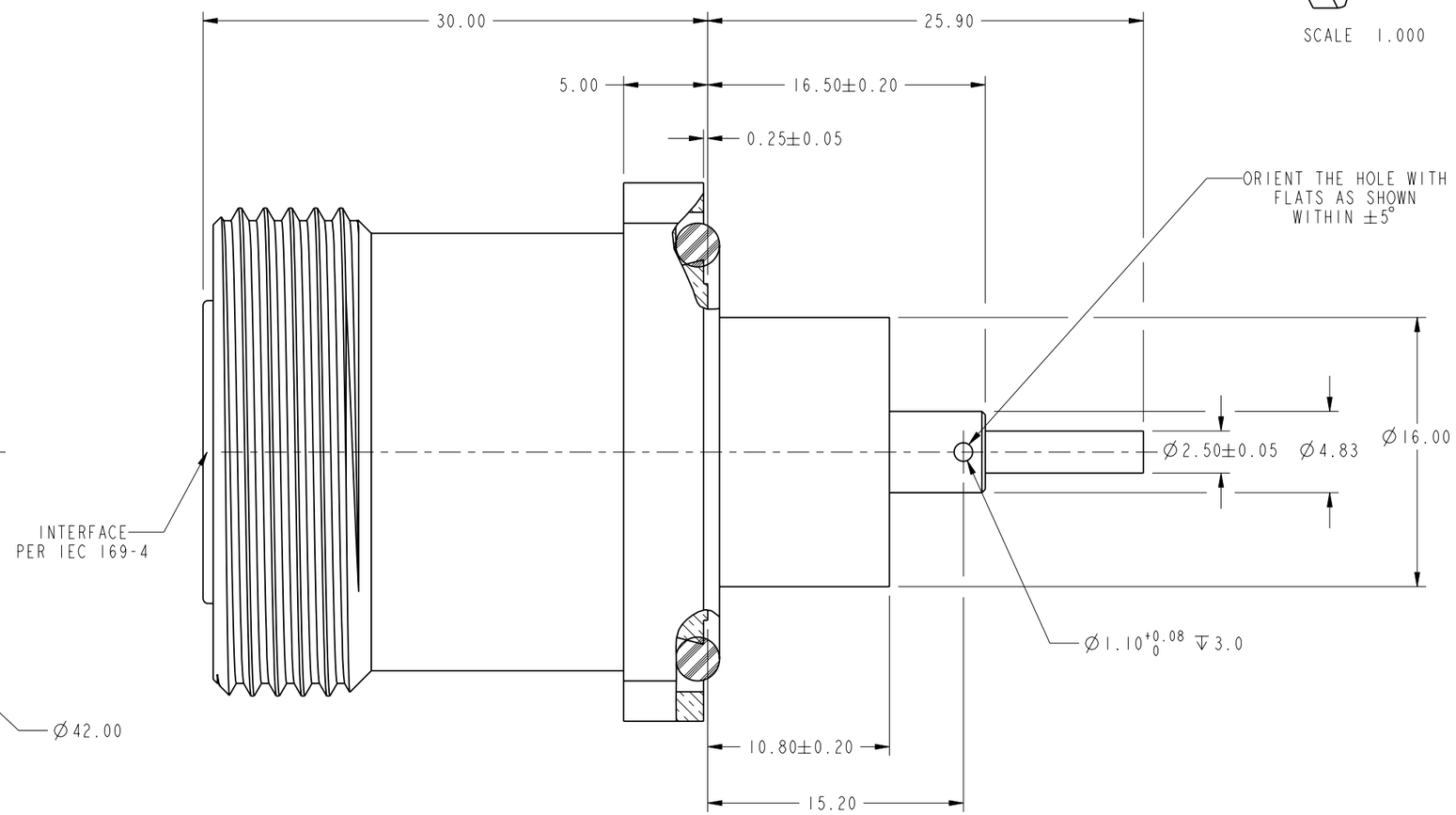

METRIC DRAWING

CUSTOMER OUTLINE DRAWING

ALL OTHER SHEETS ARE FOR INTERNAL USE ONLY

UNLESS OTHERWISE SPECIFIED, DIMENSIONS ARE METRIC AND TOLERANCES ARE:
1 PLACE DECIMAL ± 0.3MM (.012") | 2 PLACE DECIMAL ± .10 MM (.004") | ANGLES ± 1°

NOTICE - These drawings, specifications, or other data (1) are, and remain the property of Amphenol corp. (2) must be returned upon requiest; and (3) arre confidential and not to be disclosed to any person other than those to whom they are given by Amphenol Corp. the funishing of these drawings, specifications, or other data by Amphenol Corp., or to any other person to anyone for any purpose is not to be regarded by implicatioin or otherwise in any manner licensing, granting rights to permitting such holder or any other sperson to manufacture, use or sell any product, process or design, patented or otherwsie, that may in any way be related to or disclosed by said drawings, specifications, or other data.

MATERIAL SEE NOTES	DRAWN NISCHIT MV	DATE 28-Jun-07	TITLE ASSEMBLY 7/16,JACK
	ENGINEER NISCHIT MV	DATE 28-Jun-07	
REFERENCE EAR # 2440 AND 611X-4314-100	APPROVED O. BARTHELMES	DATE 7/31/07	SCALE: 3.0:1.0 / SHEET 2 OF 2
CONFIGURATION LEVEL:Release.	CAD FILE 1:Root Folder/716/716-200		DWG SIZE B / CODE ID 74868 / REV A
FINISH			

Amphenol RF
Danbury CT USA, Tainan, Taiwan, Shenzhen, China
www.amphenolrf.com

DRAWING NO.
ITEM NO.
PART NO. 716-200