ГК Атлант Инжиниринг – официальный представитель в РФ и СНГ
+7(495)109-02-08 sales@bbrc.ru www.bbrc.ru

Product Specifications

F1PNF

Type N Female for 1/4 in FSJ1-50A cable

Product Classification

Brand	HELIAX®
Product Type	Wireless and radiating connector

General Specifications

Interface	N Female
Body Style	Straight
Brand	HELIAX®
Mounting Angle	Straight

Electrical Specifications

Connector Impedance	50 ohm
Operating Frequency Band	0 – 8000 MHz
Cable Impedance	50 ohm
3rd Order IMD, typical	-112 dBm @ 910 MHz
3rd Order IMD Test Method	Two +43 dBm carriers
RF Operating Voltage, maximum (vrms)	565.00 V
dc Test Voltage	1600 V
Outer Contact Resistance, maximum	0.25 mOhm
Inner Contact Resistance, maximum	1.00 mOhm
Insulation Resistance, minimum	5000 MOhm
Average Power	0.4 kW @ 900 MHz
Peak Power, maximum	6.40 kW
Shielding Effectiveness	-110 dB

©2018 CommScope, Inc. All rights reserved. All trademarks identified by ® or ™ are registered trademarks, respectively, of CommScope.
All specifications are subject to change without notice. See www.commscope.com for the most current information. Revised: October 26, 2017

ГК Атлант Инжиниринг – официальный представитель в РФ и СНГ
+7(495)109-02-08 sales@bbrc.ru www.bbrc.ru

Product Specifications

F1PNF

Outline Drawing

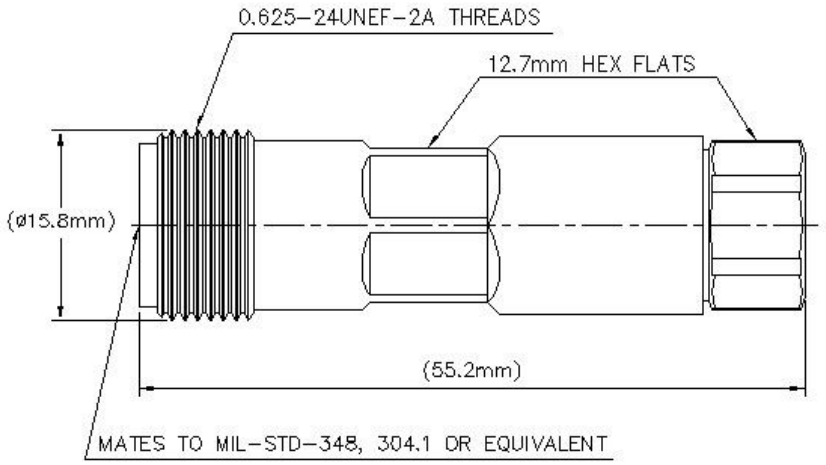

Mechanical Specifications

Outer Contact Attachment Method	Self-clamping
Inner Contact Attachment Method	Solder
Outer Contact Plating	Silver
Inner Contact Plating	Gold
Interface Durability	500 cycles
Interface Durability Method	IEC 61169-4:17
Connector Retention Tensile Force	450 N | 101 lbf
Insertion Force	124.55 N | 28.00 lbf
Insertion Force Method	IEC 61169-16:9.3.5
Pressurizable	No
Coupling Nut Proof Torque	1.70 N-m | 1.25 ft lb
Coupling Nut Proof Torque Method	IEC 61169-16:9.3.11
Coupling Nut Retention Force	445.00 N | 100.04 lbf
Coupling Nut Retention Force Method	IEC 61169-16:9.3.11

Dimensions

Nominal Size	1/4 in
Diameter	15.83 mm | 0.62 in
Height	15.83 mm | 0.62 in
Length	55.19 mm | 2.17 in
Weight	100.46 g | 0.22 lb
Width	15.83 mm | 0.62 in

Environmental Specifications

Operating Temperature	-55 °C to +85 °C (-67 °F to +185 °F)

©2018 CommScope, Inc. All rights reserved. All trademarks identified by ® or ™ are registered trademarks, respectively, of CommScope.
All specifications are subject to change without notice. See www.commscope.com for the most current information. Revised: October 26, 2017

ГК Атлант Инжиниринг – официальный представитель в РФ и СНГ
+7(495)109-02-08 sales@bbrc.ru www.bbrc.ru

Product Specifications

F1PNF

Storage Temperature	-65 °C to +125 °C (-85 °F to +257 °F)
Immersion Depth	1 m
Immersion Test Mating	Mated
Immersion Test Method	IEC 60529:2001, IP68
Moisture Resistance Test Method	IEC 60068-2-3
Mechanical Shock Test Method	IEC 60068-2-27
Thermal Shock Test Method	IEC 60068-2-14
Vibration Test Method	IEC 60068-2-6
Corrosion Test Method	IEC 60068-2-11

Standard Conditions

Attenuation, Ambient Temperature	20 °C | 68 °F
Average Power, Ambient Temperature	40 °C | 104 °F
Average Power, Inner Conductor Temperature	100 °C | 212 °F

Return Loss/VSWR

Frequency Band	VSWR	Return Loss (dB)
45–4100 MHz	1.12	25.00
4100–6200 MHz	1.17	22.00
6200–11000 MHz	1.43	15.00

Regulatory Compliance/Certifications

Agency	Classification
RoHS 2011/65/EU	Compliant by Exemption
China RoHS SJ/T 11364-2006	Above Maximum Concentration Value (MCV)
ISO 9001:2008	Designed, manufactured and/or distributed under this quality management system

* Footnotes

Immersion Depth	Immersion at specified depth for 24 hours

©2018 CommScope, Inc. All rights reserved. All trademarks identified by ® or ™ are registered trademarks, respectively, of CommScope.
All specifications are subject to change without notice. See www.commscope.com for the most current information. Revised: October 26, 2017