ROHS COMPLIANT

PRODUCT DATA DRAWING

REVISION HISTORY			
REV	DESCRIPTION	DATE	APPROVED
-	DCN 38042	02/11	STW
A	NRN 39636	08/15	STW

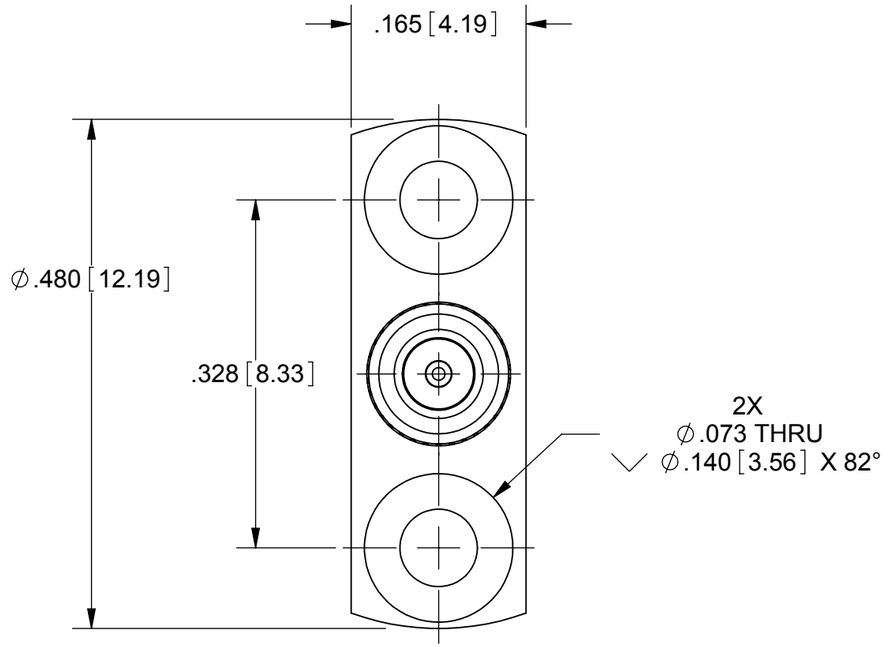

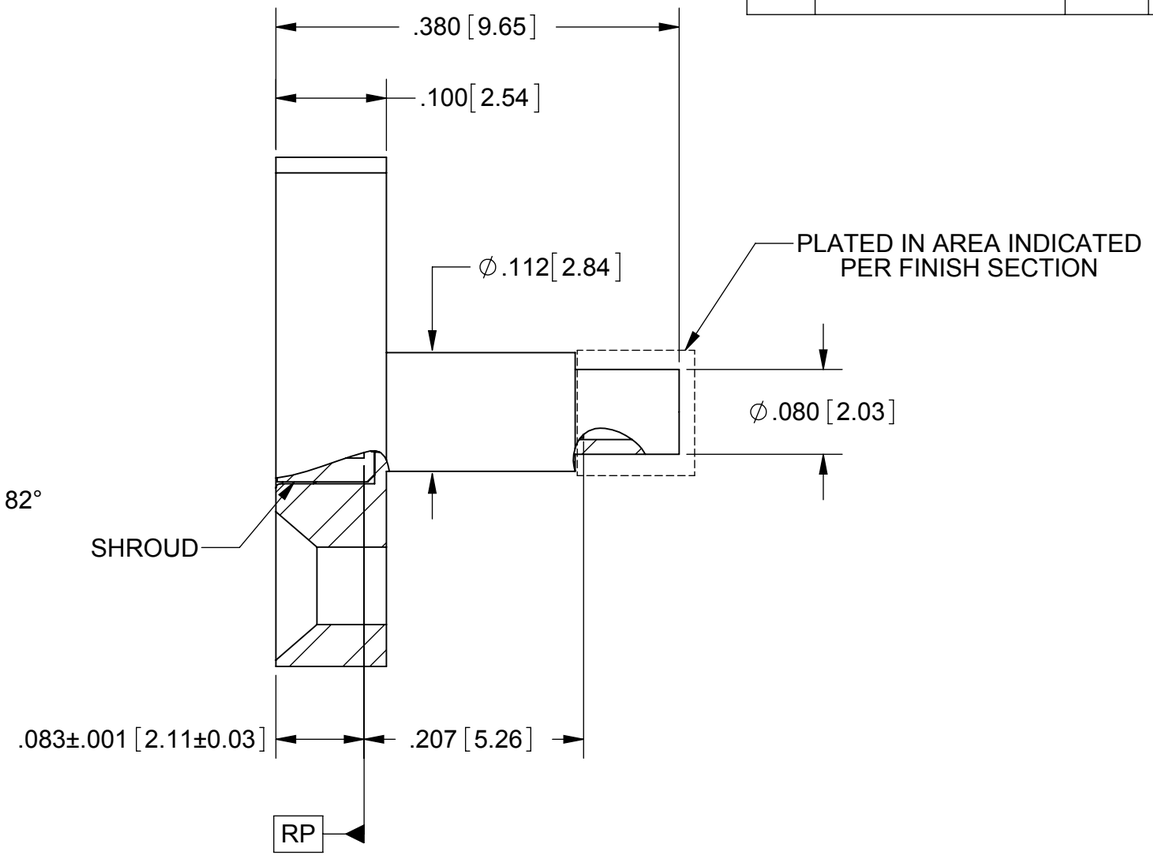

MATERIAL:

BODY & SHROUD: STAINLESS STEEL PER AMS-5640, ALLOY UNS S30300, TYPE 1

CONTACT: BERYLLIUM COPPER PER ASTM B196, ALLOY No. UNS C17300, TD04

INSULATORS: PTFE PER ASTM D1710, TYPE I, GRADE 1, CLASS B

FINISH:

BODY & SHROUD: PASSIVATED PER AMS-2700, TYPE 2

BODY (IN AREA INDICATED): GOLD PER ASTM B488, TYPE I, CODE C, CLASS 1.27; OVER NICKEL PER AMS-QQ-N-290, CLASS 1, .00005" MIN.

CONTACT: GOLD PER ASTM B488, TYPE II, CODE C, CLASS 1.27; OVER NICKEL PER AMS-QQ-N-290, CLASS 1, .00005" MIN.

PERFORMANCE:

IMPEDANCE: 50 OHMS
FREQ. RANGE: DC TO 40.0 GHz
VSWR: 1.30:1 DC TO 40.0 GHz
DWV: 325 VRMS
OPERATING TEMP.: -55°C TO +125°C

MATERIAL: SEE NOTES
FINISH: SEE NOTES
SURFACE AREA: N/A

PROPRIETARY

THE INFORMATION CONTAINED IN THIS DRAWING IS THE SOLE PROPERTY OF SV MICROWAVE, INC. ANY REPRODUCTION IN PART OR AS A WHOLE WITHOUT THE WRITTEN PERMISSION OF SV MICROWAVE, INC IS PROHIBITED.

DIMENSIONS ARE IN INCHES TOLERANCES:
FRACTIONAL: ±1/64 ANGULAR: X° ±1°0' X°X' ±15'
DECIMAL: .X ±.030 .XX ±.010 .XXX ±.005

INTERPRET DIMENSIONS AND TOLERANCES PER ASME Y14.5M - 1994

THIRD ANGLE PROJECTION

UNLESS OTHERWISE SPECIFIED
1) ALL DIMENSIONS ARE IN INCHES [MILLIMETERS]
2) ALL DIMENSIONS ARE AFTER PLATING.
3) BREAK CORNERS & EDGES .005 R. MAX.
4) CHAM. 1ST & LAST THREADS.
5) SURFACE ROUGHNESS 63 MIL-STD-10.
6) DIA. S ON COMMON CENTERS TO BE CONCENTRIC WITHIN .005 T.I.R.
7) REMOVE ALL BURRS

DRAWN:	FED	02/28/11
CHECKED:	STW	02/28/11
APPROVED:	STW	02/28/11

SV Microwave, Inc.
2400 Centrepark West Drive, Suite 100
West Palm Beach, FL 33409

TITLE: SMPM MALE 2-HOLE FLANGE MOUNT FOR ∅.047 CABLE

SIZE	CAGE CODE	DWG. NO.
B	95077	SF3211-60025

SCALE: 7:1 SHEET 1 OF 1

Downloaded from Arrow.com.