ГК Атлант Инжиниринг – официальный представитель в РФ и СНГ
+7 (495) 109-02-08 sales@bbrc.ru www.bbrc.ru

NOTES:
1. MATERIALS AND FINISHES:
   BODY - BRASS, WHITE BRONZE PLATING(55% Cu, 25% TIN, 20% ZINC)
   CONTACT - PHOSPHOR BRONZE, GOLD PLATING(.000100 MIN OVER .000100 MIN COPPER)
   INSULATOR - PTFE
   O-RING - SILICONE RUBBER
2. ELECTRICAL:
   A. IMPEDANCE: 50 OHM
   B. FREQUENCY RANGE: DC - 7.5 GHz
   C.RETURN LOSS - 30 dB MIN. @ 3 GHz
   D. DIELECTRIC WITHSTANDING VOLTAGE: 4000 VRMS, MIN.
   E. PASSIVE INTERMODULATION: CONSTRUCTED TO MEET -120 dBm WITH TWO +43 dBm CARRIERS WHEN PROPERLY TERMINATED.
3. MECHANICAL:
   A. DURABILTIY: 500 CYCLES MIN.
   B. TEMERATURE RANGE: -40° C TO 150° C
   C. COUPLING NUT TORQUE: 260.0 IN-LBS
   D. PROOF TORQUE: 310.0 IN-LBS
4. PACKAGING:
   A. QUANTITY: SINGLE PACK
   B. MARKING: BAG TO BE MARKED "AMPHENOL, 716-187, AND DATE CODE"
5. CONNECTOR COMPLIES WITH IEC 169-4, CLASS 3 AND CECC 22190 SPECIFICATIONS.

716-187	REVISIONS				
DRAWING NO.	REV	DESCRIPTION	DATE	ECO	APPR
THIRD ANGLE PROJ.	A	RELEASE TO MFG.	4/27/04	44941	HP
	B	ADDED O-RING, CHANGED THE GLAND DIMS	6/10/04	45013	HP
	C	1. FLANGE HOLE DIMS WERE: Ø.310 AND Ø.150 2. FLANGE WAS: 1.75 SQUARE 3. SEE NOTE-1, CONTACT WAS GOLD PLATED	8/2/04	45043	HP
	D	I. CHANGED THE GLAND DIMENSIONS II. ADDED GEOMETRIC TOLERANCES III. SEE NOTE 1 AND 3 IV. CHANGED THE SOLDER CUP DIMENSIONS	9/10/04	45137	HP

CUSTOMER OUTLINE DRAWING

ALL OTHER SHEETS ARE FOR INTERNAL USE ONLY

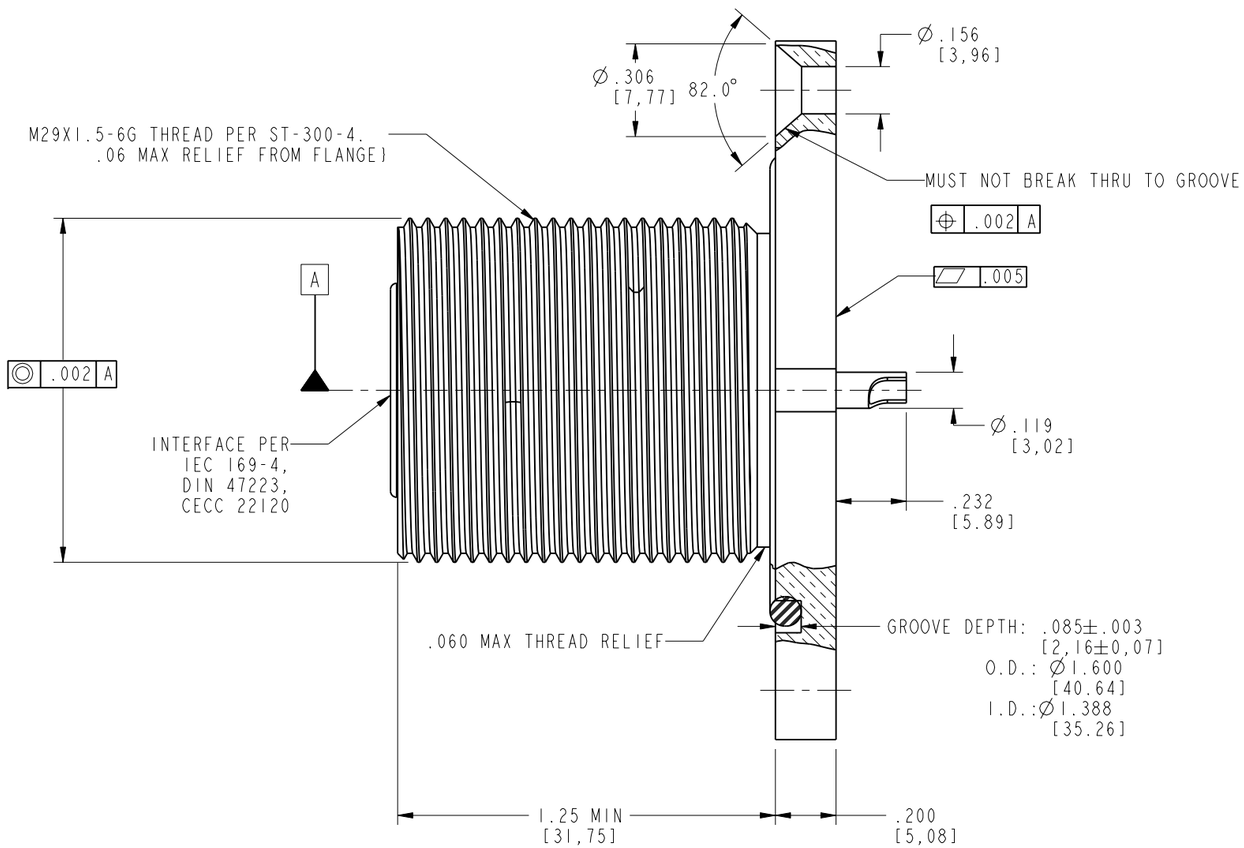

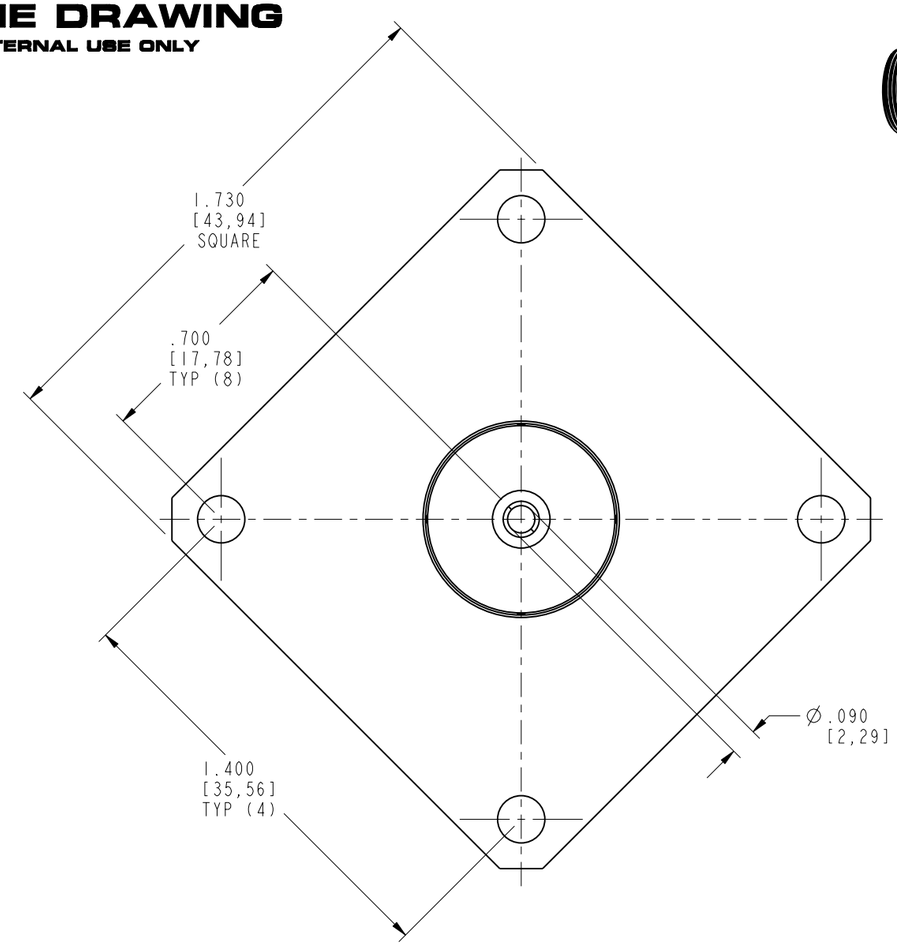

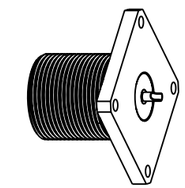

SCALE 0.500

UNLESS OTHERWISE SPECIFIED, DIMENSIONS ARE IN INCHES AND TOLERANCES ARE:
2 PLACE DECIMAL ±.015 (0,381 mm) | 3 PLACE DECIMAL ±.005 (0,127 mm) | ANGLES ± 1°

NOTICE - These drawings, specifications, or other data (1) are, and remain the property of Amphenol Corp. (2) must be returned upon request; and (3) are confidential and not to be disclosed to any person other than those to whom they are given by Amphenol Corp. The furnishing of these drawings, specifications, or other data by Amphenol Corp., or to any other person to anyone for any purpose is not to be regarded by implication or otherwise in any manner licensing, granting rights or permitting such holder or any other person to manufacture, use or sell any product, process or design, patented or otherwise, that may in any way be related to or disclosed by said drawings, specifications, or other data.

MATERIAL

REFERENCE
GEN# ASSYF49_716
EAR #1347
611X-4095-100
ECO# 45137

DRAWN H. PARIKH	DATE 4/22/04	
ENGINEER H. PARIKH	DATE 4/22/04	
APPROVED O. BARTHELMES	DATE 4/26/04	
CAD FILE 1:\716\716-187		

TITLE
7/16 (F) RECEPTACLE
PANEL MOUNT

Amphenol RF
Danbury, CT, USA
Tainan, Taiwan
Shenzhen, China
www.amphenolrf.com

SCALE: 2.0:1 | SHEET 2 OF 2

CODE ID	DWG SIZE	DRAWING NO.	REV
74868	B	716-187	D