ГК Атлант Инжиниринг – официальный представитель в РФ и СНГ
+7 (495) 109-02-08 sales@bbrc.ru www.bbrc.ru

THIRD ANGLE PROJ.

REVISIONS				
REV	DESCRIPTION	DATE	ECO	APPR
G	ADDED L M N KEY CODING	27-Sep-07	-----	ANGELA
H	LOCK COVER MATERIAL WAS CHANGED	02-May-08	-----	SCOTT
J	ADDED COD DRAWING AND PPAP REQUIREMENT	18-Aug-09	-----	SCOTT

NOTES:

1. MATERIALS AND FINISHES(IN MICRO-INCHES)
   - BODY = BRASS, NICKEL PL. 100 MIN.THICK OVER COPPER STRIKE
   - CONTACT PIN= BERYLLIUM COPPER, GOLD PL. 30 MIN. THICK OVER NICKEL PL. 100 MIN. THICK OVER COPPER STRIKE
   - LOCK COVER = NYLON66 (WITH 30% GLASS FIBER), COLOR:REFER TO TABLE BELOW FOR KEY CODE
   - INSULATOR = PTFE PER, NATURAL
   - FERRULE = COPPER, NICKEL PL. 100 MIN. THICK OVER COPPER STRIKE
   - BARREL = BRASS, NICKEL PL. 100 MIN.THICK OVER COPPER STRIKE
2. ELECTRICAL:
   - A. IMPEDANCE: 50 OHM (NOMINAL)
   - B. FREQUENCY RANGE: DC - 6 GHz,(OPTIMIZED FOR DC-4GHz)
   - C. VSWR(RETURN LOSS): 1.4 (-15.6 dB), MAX.(DC-2GHz)
     (MATED PAIR) 1.5 (-13.9 dB), MAX.(2-3GHz)
   - D. DIELECTRIC WITHSTANDING VOLTAGE: 800 VRMS, MIN.
3. MECHANICAL:
   - A. DURABILITY: 100 CYCLES MIN.
   - B. TEMPERATURE RANGE: -40° C TO 100° C
4. PACKAGING:
   - A. QUANTITY: TRAY PACK
   - B. MARKING: TRAY TO BE MARKED "AMPHENOL,FAI-NXRJ-C01-0, AND DATE CODE"
5. CRIMPED FERRULE:
   - HEX. CRIMP SIZE .128"
6. CONTACT PIN TO SOLDER

CONFIGURATION CONTROL:
NO CHANGES PERMITTED TO DRAWING WITHOUT PPAP QUALIFIED CUSTOMER APPROVAL

TABLE

CODING	PART NO.	DRAWING NO.	COLOR	RAL NO.
A	FAI-NARJ-C01-0	FK6112AW-007-NT30G-50	JET BLACK	9005
B	FAI-NBRJ-C01-0	FK6112BW-007-NT30G-50	CREAM	9001
C	FAI-NCRJ-C01-0	FK6112CW-007-NT30G-50	SIGNAL BLUE	5005
D	FAI-NDRJ-C01-0	FK6112DW-007-NT30G-50	CLARET VIOLET	4004
E	FAI-NERJ-C01-0	FK6112EW-007-NT30G-50	LEAF GREEN	6002
F	FAI-NFRJ-C01-0	FK6112FW-007-NT30G-50	NUT BROWN	8011
G	FAI-NGRJ-C01-0	FK6112GW-007-NT30G-50	BLUE GREY	7031
H	FAI-NHRJ-C01-0	FK6112HW-007-NT30G-50	HEATHER VIOLET	4003
I	FAI-NIRJ-C01-0	FK6112IW-007-NT30G-50	BEIGE	1001
K	FAI-NKRJ-C01-0	FK6112KW-007-NT30G-50	CURRY	1027
L	FAI-NLRJ-C01-0	FK6112LW-007-NT30G-50	CARMINE RED	3002
M	FAI-NMRJ-C01-0	FK6112MW-007-NT30G-50	PASTEL ORANGE	2003
N	FAI-NNRJ-C01-0	FK6112NW-007-NT30G-50	PASTEL GREEN	6019
Z	FAI-NZRJ-C01-0	FK6112ZW-007-NT30G-50	WATER BLUE	5021

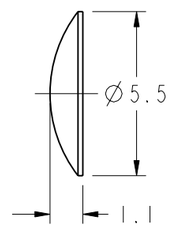

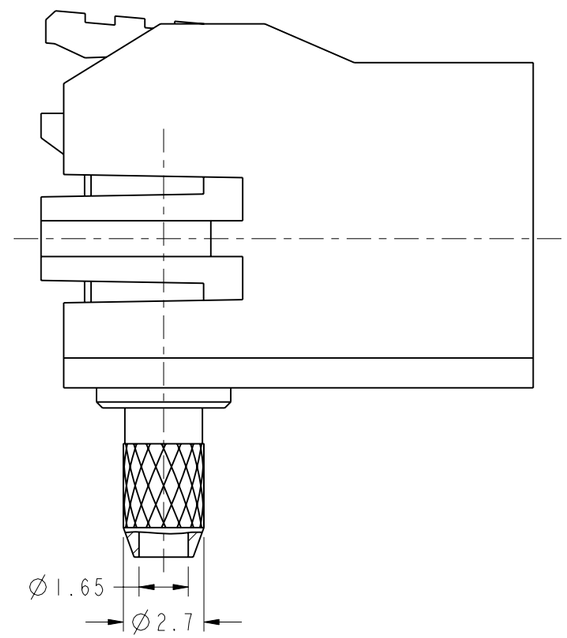

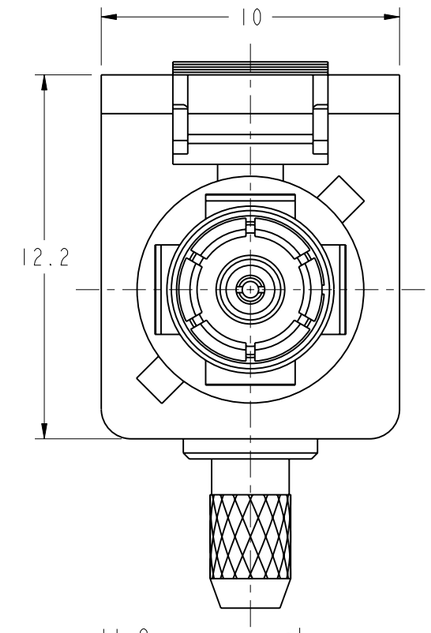

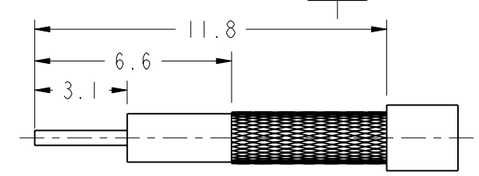

RECOMMENDED
CABLE STRIPPING DIM'S 1

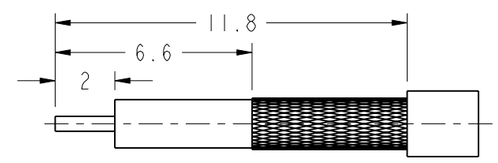

RECOMMENDED
CABLE STRIPPING DIM'S 2

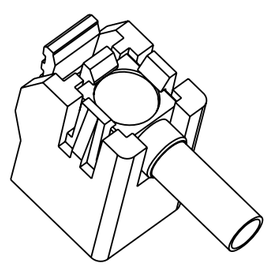

SCALE 2.000

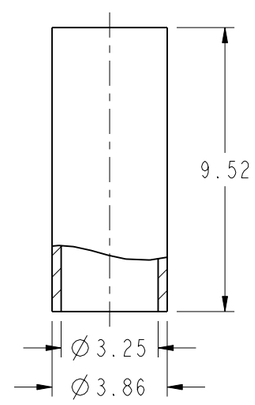

CUSTOMER OUTLINE DRAWING
ALL OTHER SHEETS ARE FOR INTERNAL USE ONLY

UNLESS OTHERWISE SPECIFIED, DIMENSIONS ARE IN METRIC AND TOLERANCES ARE:

0.5 - 6mm	6 - 30mm	30 - 120mm	ANGLES
±0.1mm	±0.2mm	± 0.3mm	±1°

NOTICE - These drawings, specifications, or other data (1) are, and remain the property of Amphenol corp. (2) must be returned upon requiest; and (3) arre confidential and not to be disclosed to any person other than those to whom they are given by Amphenol Corp. the funishing of these drawings, specifications, or other data by Amphenol Corp., or to any other person to anyone for any purpose is not to be regarded by implicatioin or otherwise in any manner licensing, granting rights to permitting such holder or any other sperson to manufacture, use or sell any product, process or design, patented or otherwsie, that may in any way be related to or disclosed by said drawings, specifications, or other data.

MATERIAL	DRAWN EDWARD	DATE 15-May-09	TITLE FAKRA R/A JACK (FOR RG-174/U, 188A/U, 316/U)
	ENGINEER JERRY	DATE 02-May-08	
REFERENCE	APPROVED SCOTT	DATE 15-May-09	SCALE: 5.0:1.0 / SHEET 2 OF 2
	CAD FILE		DWG SIZE B / CODE ID 74868 / REV J
FINISH	I:\FAKRA\FK6112XX-007-NT30G-50		

Amphenol RF
Danbury CT USA, Tainan, Taiwan, Shenzhen, China
www.amphenolrf.com

DRAWING NO.	FK6112XX-007-NT30G-50
ITEM NO.	FK6112AAX36NC5F
PART NO.	FAI-NXRJ-C01-0