REV.	DATE	DESCRIPTION
A	02/27/01	ADD CABLE DESCRIPTION
B	07/29/02	MODIFY PART SIZE AND DESCRIPTION
C	01/17/06	UPDATE DRAWING FORMAT

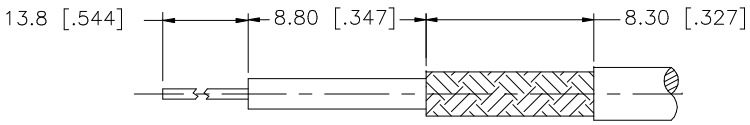

RECOMMENDED
CABLE STRIPPING DIM'S

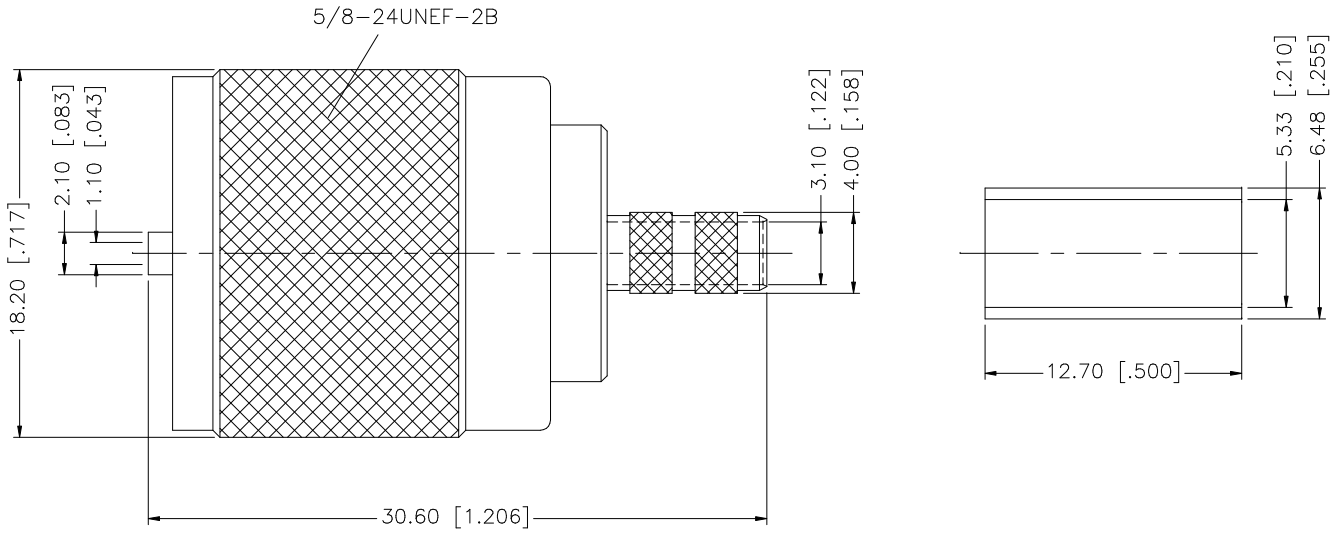

	DESCRIPTION	MATERIAL	FINISH	QTY
8				
7	FERRULE	COPPER	NICKEL	1
6	HEX NUT	BRASS	NICKEL	1
5	WASHER	BRASS	NICKEL	1
4	GASKET	SILICONE	RED	1
3	CONTACT PIN	BER. COPPER	GOLD	1
2	INSULATOR	TEFLON	NATURAL	1
1	BODY	BRASS	NICKEL	1

UNLESS OTHERWISE SPECIFIED DIMENSIONS ARE IN MILLIMETERS. DIMENSIONS IN [ ] ARE IN INCHES AND FOR CUSTOMER REFERANCE ONLY.

UNLESS OTHERWISE SPECIFIED TOLERANCES FOR MILLIMETERS ARE:
0.5 – 8mm ± 0.20mm
8 – 30mm ± 0.40mm
30 – 120mm ± 0.50mm

UNLESS OTHERWISE SPECIFIED TOLERANCES FOR INCHES ARE:
.020 – .315 = ± 0.007"
.315 – 1.180 = ± 0.015"
1.180 – 4.724 = ± 0.020"

DO NOT SCALE DRAWING

APPROVALS		DATE
DRAWN	G.R.S.	01/17/06
CHECKED		
ISSUED		
SHEET	1 OF 1	

CAD FILE C:/182/182310.DWG

Amphenol Connex

PART DESCRIPTION
UHF CRIMP PLUG
(FOR RG–142/U CABLE)

PART NO. 182310

DWG. NO.	REV.	SIZE	SCALE
182310.DWG	C	A	NA

Downloaded from Arrow.com.