ГК Атлант Инжиниринг – официальный представитель в РФ и СНГ
+7 (495) 109-02-08 sales@bbrc.ru www.bbrc.ru

NOTES:
1. MATERIALS AND FINISHES:
   BODY - STAINLESS TSEEL,PASSIVATED
   CONTACT - BeCu, GOLD PLATING (.00050 MIN THICK)
   INSULATOR - PTFE
2. ELECTRICAL:
   A. IMPEDANCE: 50 OHM
   B. DIELECTRIC WITHSTANDING VOLTAGE: 1000 VRMS, MIN.
3. MECHANICAL:
   A. DURABILITY: 500 CYCLES MIN.
   B. TEMPERATURE RANGE: -55° C TO 165° C
4. PACKAGING:
   A. QUANTITY: SINGLE PACK
   B. MARKING: BAG TO BE MARKED
   "AMPHENOL, 901-9211-SF, AND DATE CODE"

901-9211-SF	REVISIONS				
DRAWING NO.	REV	DESCRIPTION	DATE	ECO	APPR
THIRD ANGLE PROJ.	-	RELEASE TO MFG.	-	-	-
	J	UPDATE PER MIL-STD-348	2/7/08	46934	VC

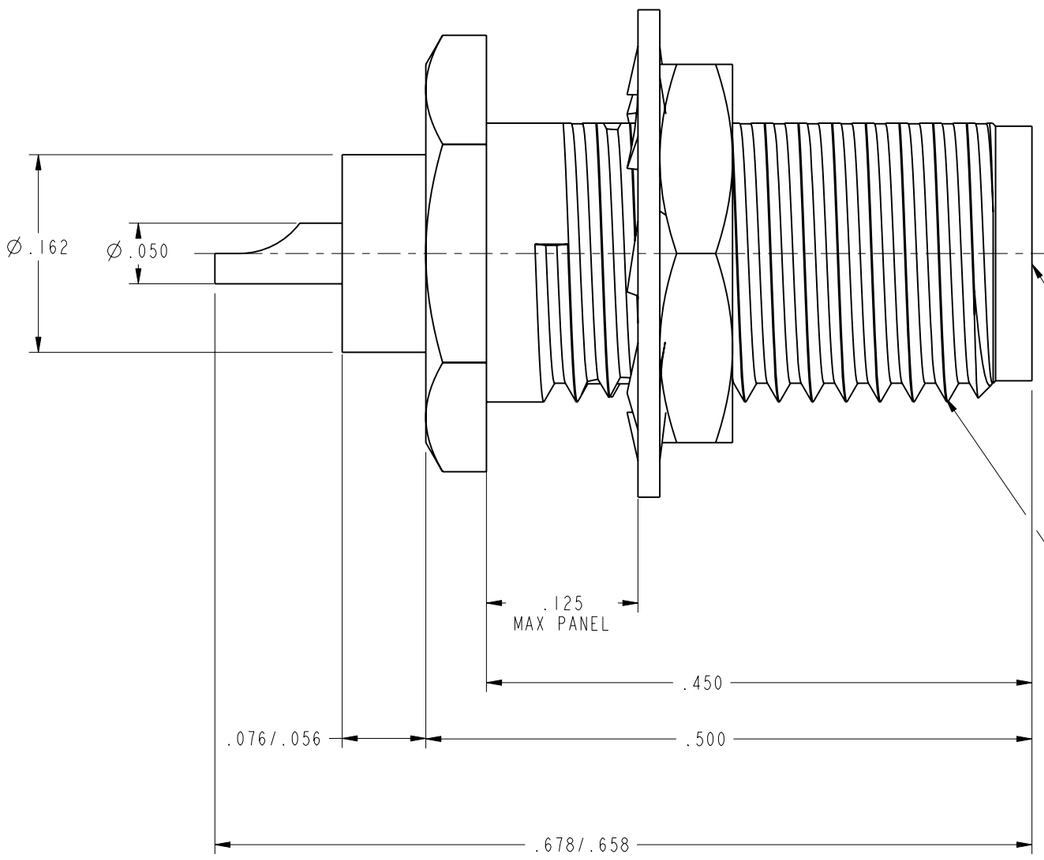

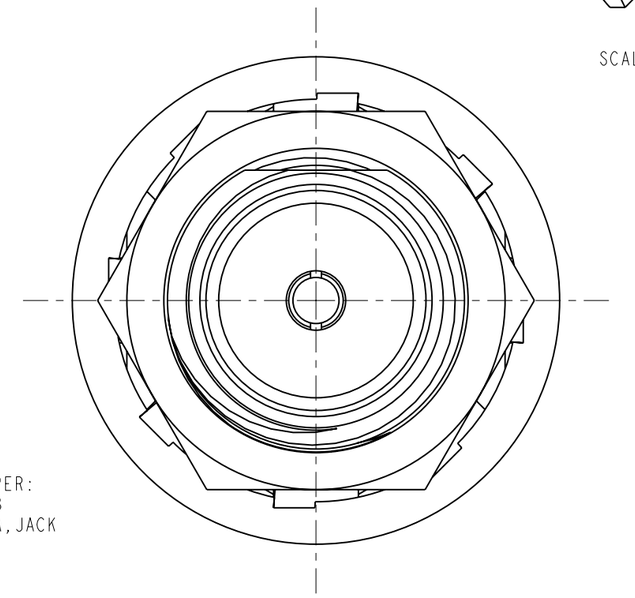

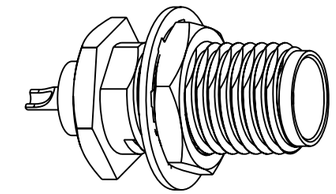

SCALE 3.000

CUSTOMER OUTLINE DRAWING
ALL OTHER SHEETS ARE FOR INTERNAL USE ONLY

UNLESS OTHERWISE SPECIFIED, DIMENSIONS ARE IN INCHES AND TOLERANCES ARE:
2 PLACE DECIMAL ±.015 (0,381 mm) | 3 PLACE DECIMAL ±.005 (0,127 mm) | ANGLES ± 1°

NOTICE - These drawings, specifications, or other data (1) are, and remain the property of Amphenol Corp. (2) must be returned upon request; and (3) are confidential and not to be disclosed to any person other than those to whom they are given by Amphenol Corp. The furnishing of these drawings, specifications, or other data by Amphenol Corp., or to any other person to anyone for any purpose is not to be regarded by implication or otherwise in any manner licensing, granting rights or permitting such holder or any other person to manufacture, use or sell any product, process or design, patented or otherwise, that may in any way be related to or disclosed by said drawings, specifications, or other data.

MATERIAL

REFERENCE
D.O.R 42-901-315350

DRAWN S.P	DATE 11/12/76	TITLE SMA BULKHEAD RECEPTACLE
ENGINEER RPA	DATE 12/20/76	
APPROVED M. HOYACK	DATE 2/6/08	
CAD FILE 1:\SMA\901-9211-SF		

Amphenol RF
Danbury, CT, USA
Tainan, Taiwan
Shenzhen, China
www.amphenolrf.com

SCALE: 8.0:1 | SHEET 2 OF 2

CODE ID	DWG SIZE	DRAWING NO.	REV
74868	B	901-9211-SF	J