ROHS COMPLIANT

PRODUCT DATA DRAWING

REVISION HISTORY			
REV	DESCRIPTION	DATE	APPROVED
-	DCN 39817	05/13	STW

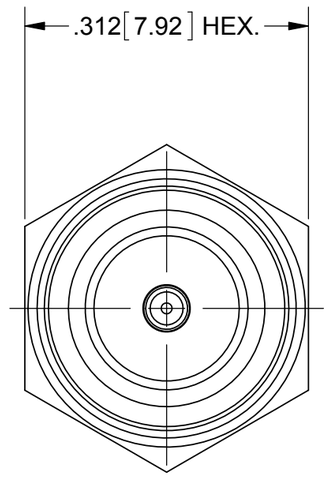

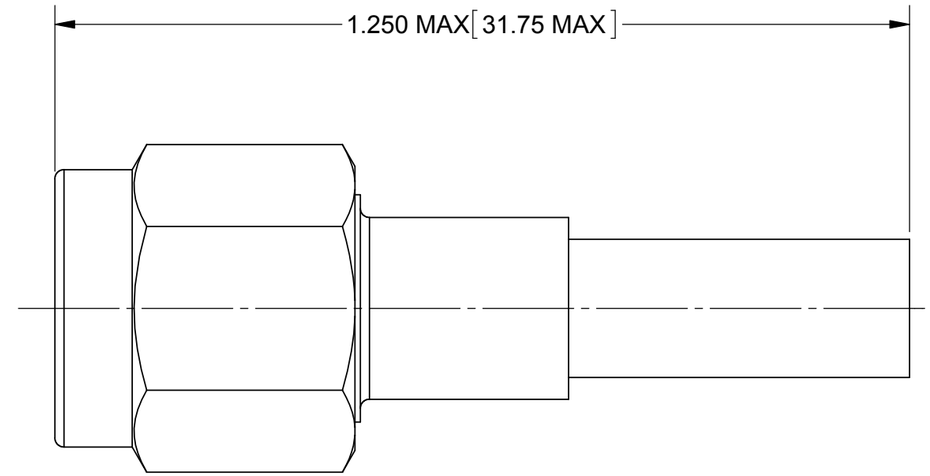

MATERIAL:

BODY & COUPLING NUT: STAINLESS STEEL PER AMS-5640, ALLOY UNS S30300, TYPE 1

LOCK RING: BERYLLIUM COPPER PER ASTM B196, ALLOY No. UNS C17300, TD04

CRIMP RING & CONTACT: BRASS PER ASTM B16, ALLOY UNS No. C36000

INSULATOR: PTFE PER ASTM D1710, TYPE I, GRADE 1, CLASS B

GASKET: SILICONE RUBBER PER A-A-59588, CLASS 2B, GRADE 50/60

SHRINK TUBING (NOT SHOWN): PER M23053/4

FINISH:

BODY & COUPLING NUT: PASSIVATED PER AMS-2700.

CONTACT: GOLD PER ASTM B488, TYPE II, CODE C, CLASS 1.27, OVER NICKEL PER AMS-QQ-N-290, CLASS 1, .00005" MIN.

CRIMP RING: NICKEL PER AMS-QQ-N-290, CLASS 2, .00005" MIN.

PERFORMANCE:

IMPEDANCE: 50 OHMS
FREQ. RANGE: DC TO 3.0 GHz
VSWR: 1.15 + .01F(F IN GHz), DC TO 3.0 GHz

MATERIAL: SEE NOTES
FINISH: SEE NOTES
SURFACE AREA: N/A

PROPRIETARY
THE INFORMATION CONTAINED IN THIS DRAWING IS THE SOLE PROPERTY OF SV MICROWAVE, INC. ANY REPRODUCTION IN PART OR AS A WHOLE WITHOUT THE WRITTEN PERMISSION OF SV MICROWAVE, INC IS PROHIBITED.

DIMENSIONS ARE IN INCHES TOLERANCES:
FRACTIONAL: ±1/64 ANGULAR: X° ±1°0' X°X' ±15'
DECIMAL: .X ±.030 .XX ±.010 .XXX ±.005
INTERPRET DIMENSIONS AND TOLERANCES PER ASME Y14.5M - 1994

THIRD ANGLE PROJECTION

UNLESS OTHERWISE SPECIFIED
1) ALL DIMENSIONS ARE IN INCHES [MILLIMETERS]
2) ALL DIMENSIONS ARE AFTER PLATING.
3) BREAK CORNERS & EDGES .005 R. MAX.
4) CHAM. 1ST & LAST THREADS.
5) SURFACE ROUGHNESS 63₄MIL-STD-10.
6) DIA.'S ON COMMON CENTERS TO BE CONCENTRIC WITHIN .005 T.I.R.
7) REMOVE ALL BURRS

DRAWN:	FSG 05/22/13
CHECKED:	STW 05/22/13
APPROVED:	STW 05/22/13

SV Microwave, Inc.
2400 Centrepark West Drive, Suite 100
West Palm Beach, FL 33409

TITLE: SMA STRAIGHT CRIMP PLUG FOR RG-316 CABLE

SIZE	CAGE CODE	DWG. NO.
B	95077	M39012/55-3126

SCALE: 4:1 SHEET 1 OF 1

Downloaded from Arrow.com.