Downloaded from Arrow.com.

NOTES:
1. MATERIALS AND FINISHES:
   BODY - BRASS, NICKEL PLATING
   CONTACT - BERYLLIUM COPPER, SILVER PLATING.
   INSULATOR - PTFE
2. ELECTRICAL:
   A. IMPEDANCE: 50 OHM
3. MECHANICAL:
   A. DURABILITY: 500 CYCLES MIN.
   B. TEMPERATURE RANGE: -65° C TO +165° C
4. PACKAGING:
   A. QUANTITY: SINGLE PACK
   B. MARKING: BAG TO BE MARKED
      "AMPHENOL RF, 82-63, AND DATE CODE"
5. SHOWS CABLE ENTRY DIMENSIONS.

THIRD ANGLE PROJ.

REVISIONS				
REV	DESCRIPTION	DATE	ECO	APPR
--	RELEASE TO MFG.	--	--	
T	REDRAWN IN PRO-E, ADD COD\RD-DMI105160IR3	30-May-11	47652	SH
U	STAMP "AMPHENOL" WAS "74868"\RD-DMI112060IR3	26-Dec-11	48845	SH
V	UPDATED GLOBAL FORMAT	12-May-14	49957	SH

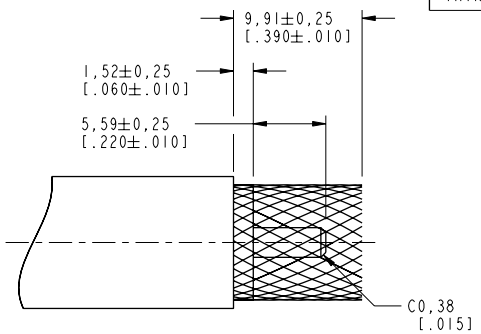

RECOMMENDED CABLE STRIPPING DIMENSIONS

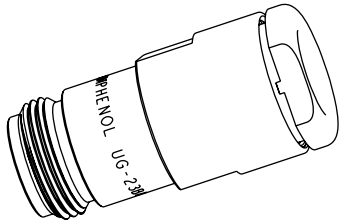

SCALE 1.500

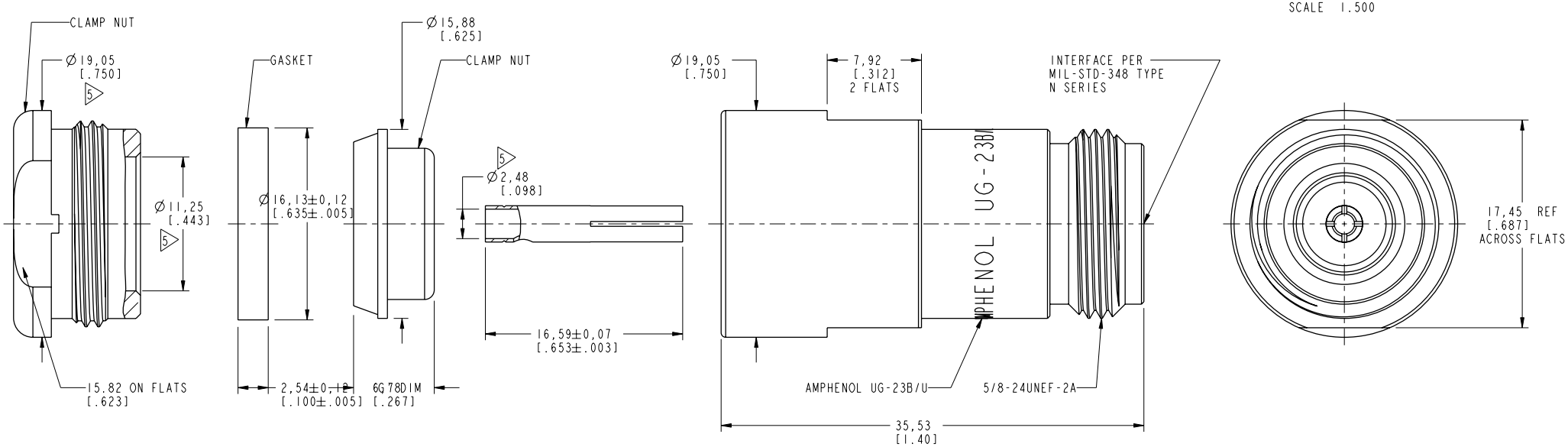

CUSTOMER OUTLINE DRAWING

ALL OTHER SHEETS ARE FOR INTERNAL USE ONLY

UNLESS OTHERWISE SPECIFIED, DIMENSIONS ARE IN METRIC AND TOLERANCES ARE:

<0.5mm	0.5 - 6mm	6 - 30mm	30 - 120mm	ANGLES
± 0.05mm	±0.1mm	±0.2mm	± 0.3mm	±1°

NOTICE - These drawings, specifications, or other data (1) are, and remain the property of Amphenol corp. (2) must be returned upon request; and (3) are confidential and not to be disclosed to any person other than those to whom they are given by Amphenol Corp. the furnishing of these drawings, specifications, or other data by Amphenol Corp., or to any other person to anyone for any purpose is not to be regarded by implication or otherwise in any manner licensing, granting rights to permitting such holder or any other person to manufacture, use or sell any product, process or design, patented or otherwise, that may in any way be related to or disclosed by said drawings, specifications, or other data.

MATERIAL
-

REFERENCE
EAR # AND

CONFIGURATION LEVEL: □□□□

FINISH

DRAWN M.DONG	DATE 5-May-14	
ENGINEER H. HUTTER	DATE 11/21/75	
APPROVED S.HSIEH	DATE 12-May-14	
CAD FILE		

TITLE
ASSEMBLY,
TYPE N JACK
FOR UG-23 B/U

SCALE: 3.0:1.0 | SHEET 2 OF 2

DWG SIZE B | REV V

Amphenol RF
www.amphenolrf.com

DRAWING NO. 82-63
ITEM NO. 82-63
PART NO. 82-63