ГК Атлант Инжиниринг – официальный представитель в РФ и СНГ
+7 (495) 109-02-08 sales@bbrc.ru www.bbrc.ru

NOTES:

1. MATERIALS AND FINISHES:
   INTERFACE BODY - BeCu, WHITE BRONZE PLATING
   CONTACT & PCB BODY- BeCu, GOLD PLATING OVER WHITE BRONZE
   INSULATOR - PTFE

2. ELECTRICAL:
   A. IMPEDANCE: 50 OHM
   B. FREQUENCY RANGE: DC - 6 GHz
   C. DIELECTRIC WITHSTANDING VOLTAGE: 500 VRMS, MIN.

3. MECHANICAL:
   A. DURABILITY: 500 CYCLES MIN.
   B. TEMPERATURE RANGE: -65° C TO 165° C

4. PACKAGING:
   A. QUANTITY: BULK PACK 100
   B. MARKING: BAG TO BE MARKED
   "AMPHENOL, 908-NM24100 100 PIECES, DATE CODE"
   AND "NON-MAGNETIC CONNECTORS"

THIRD ANGLE PROJ.

REVISIONS

REV	DESCRIPTION	DATE	ECO	APPR
A	RELEASE TO MFG.	8/8/06	46108	KJC
B	SEE SHEET 1	3/9/11	48226	JTS

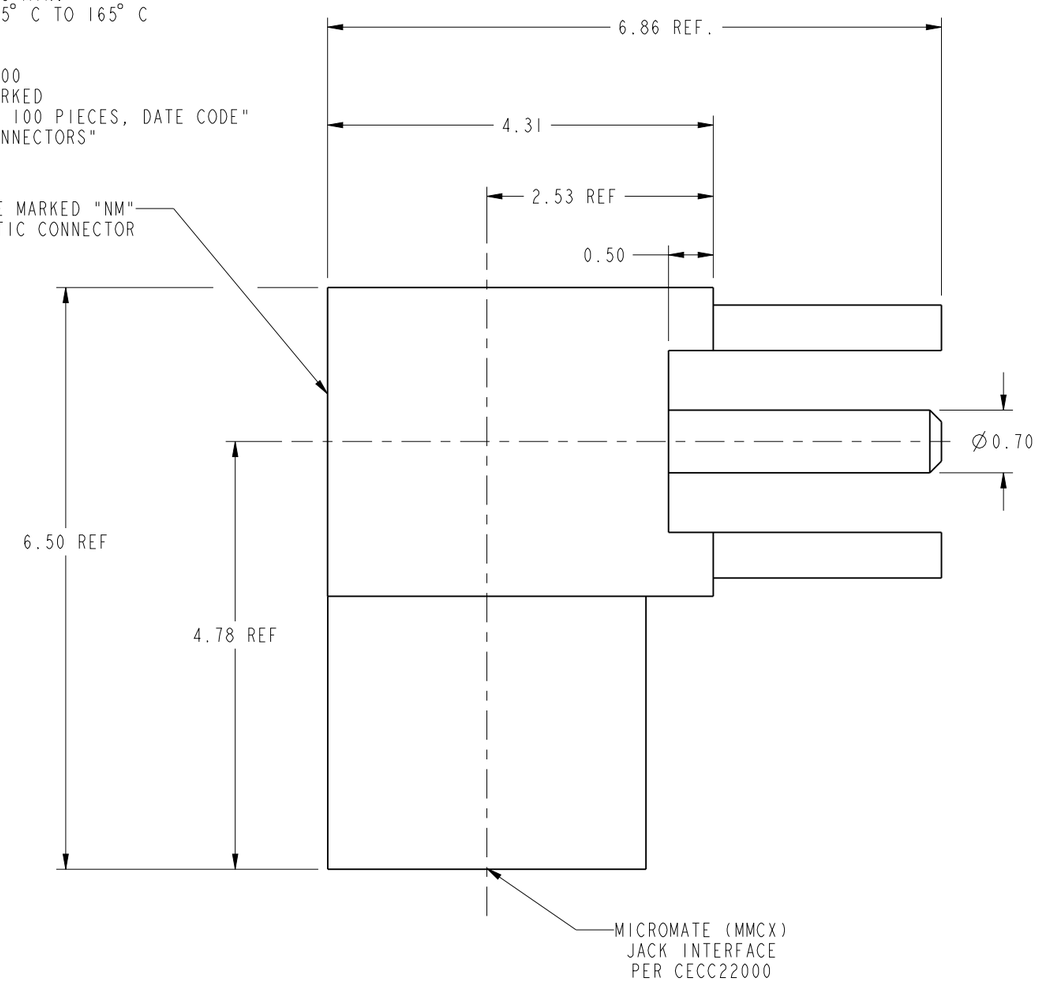

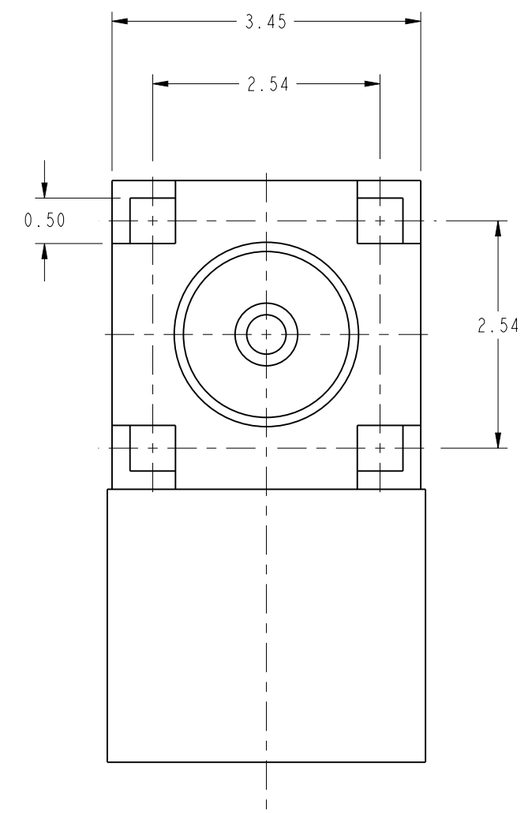

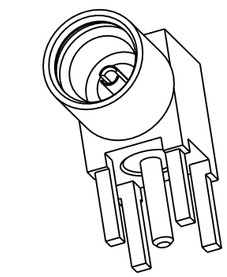

SCALE 5.000

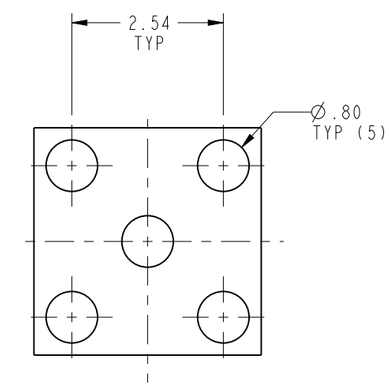

RECOMMENDED MOUNTING HOLE DIMENSIONS

CUSTOMER OUTLINE DRAWING

ALL OTHER SHEETS ARE FOR INTERNAL USE ONLY

UNLESS OTHERWISE SPECIFIED DIMENSIONS ARE METRIC AND TOLERANCES ARE:
1 PLACE DECIMAL ± 0.3mm (.012") | 2 PLACE DECIMAL ± 0.2mm | 3 PLACE DECIMAL ± 0.10 MM (.004") | ANGLES ±1°

NOTICE - These drawings, specifications, or other data (1) are, and remain the property of Amphenol corp. (2) must be returned upon requiest; and (3) arre confidential and not to be disclosed to any person other than those to whom they are given by Amphenol Corp. the funishing of these drawings, specifications, or other data by Amphenol Corp., or to any other person to anyone for any purpose is not to be regarded by implicatioin or otherwise in any manner licensing, granting rights to permitting such holder or any other sperson to manufacture, use or sell any product, process or design, patented or otherwsie, that may in any way be related to or disclosed by said drawings, specifications, or other data.

MATERIAL
-
-

REFERENCE
EAR # 1952 AND

CONFIGURATION LEVEL:

FINISH

DRAWN K. CAPOZZI — DATE 18-Jul-06
ENGINEER K. CAPOZZI — DATE 18-Jul-06
APPROVED B. C. GLEISSNER — DATE 8/8/06
CAD FILE

TITLE
ASSEMBLY MMCX
JACK R/A TO PCB
NON MAGNETIC

SCALE: 15.0:1.0 | SHEET 2 OF 2
DWG SIZE B | CODE ID 74868 | REV B

Amphenol RF
Danbury CT USA, Tainan, Taiwan, Shenzhen, China
www.amphenolrf.com

DRAWING NO.
ITEM NO.
908-NM24100