ГК Атлант Инжиниринг – официальный представитель в РФ и СНГ
+7 (495) 109-02-08 sales@bbrc.ru www.bbrc.ru

NOTES:
1. MATERIALS AND FINISHES:
   BODY - BRASS, NICKEL PLATING
   CONTACT - PHOSPHOR BRONZE, GOLD PLATING
   RING, END PLATE, HEX NUT - BRASS, NICKEL PLATING
   LOCKWASHER - PHOSPHOR BRONZE, NICKEL PLATING
   PIN - BRASS, GOLD PLATING
   INSULATOR - PTFE
2. ELECTRICAL:
   A. IMPEDANCE: 75 OHM
   B. FREQUENCY RANGE: DC - 4 GHz
   D. DIELECTRIC WITHSTANDING VOLTAGE: 1500 VRMS, MIN.
3. MECHANICAL:
   A. DURABILITY: 500 CYCLES MIN.
   B. TEMPERATURE RANGE: -65° C TO 165° C
4. PACKAGING:
   PACKAGE CONNECTORS 50 PER BOX (999-158-3). BULK PACK HEX NUT AND LOCKWASHER 500 PIECES PER BAG. PACKAGE 10 BOXES OF BODY SUB-ASSYS, 1 BAG OF HEX NUTS, AND 1 BAG OF LOCKWASHERS INTO CARTON 999-105-8 (TOTAL OF 500 PIECES). PLACE LABEL ON FINAL BOX MARKED "AMPHENOL 31-70221-4050" AND DATE CODE.
5. DO NOT SCALE THIS DRAWING

31-70221-4050	REVISIONS				
DRAWING NO.	REV	DESCRIPTION	DATE	ECO	APPR
THIRD ANGLE PROJ.	J	SEE SHEET 1	9/14/10	48239	

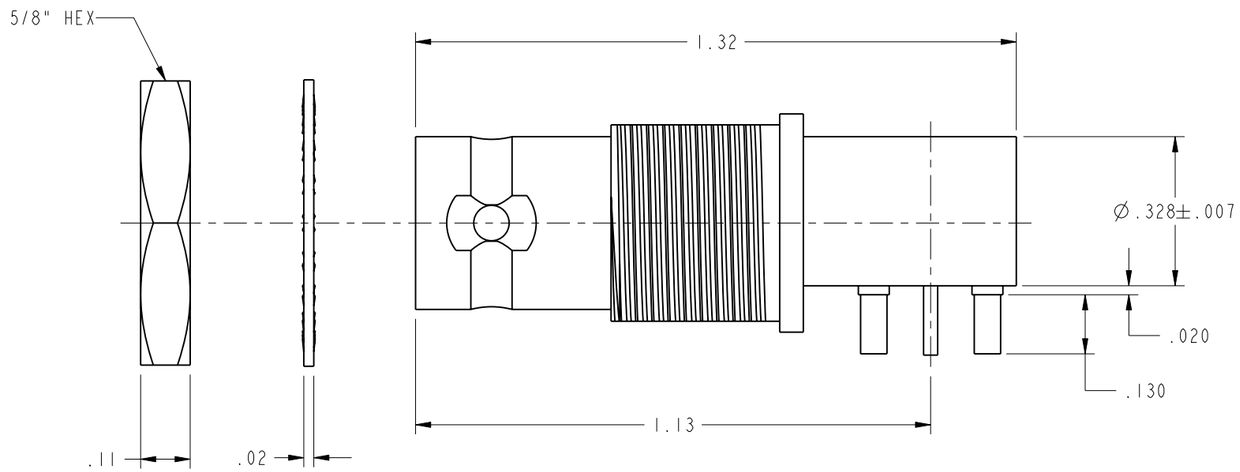

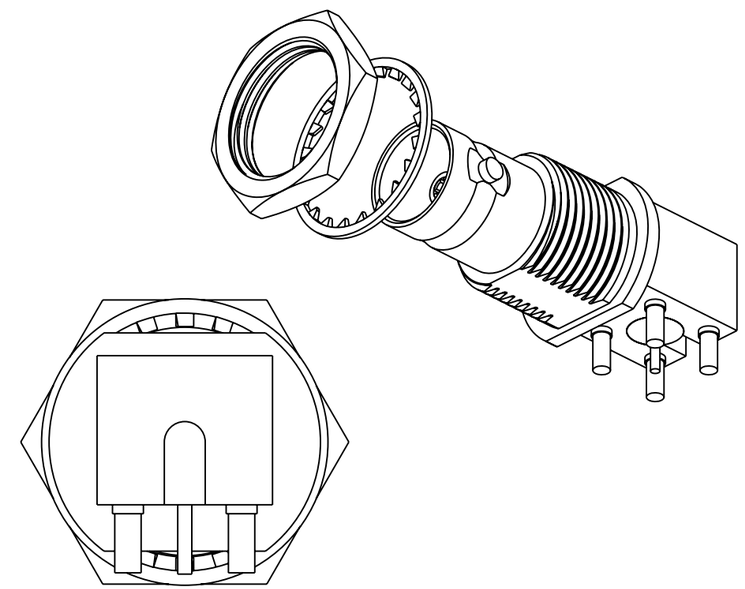

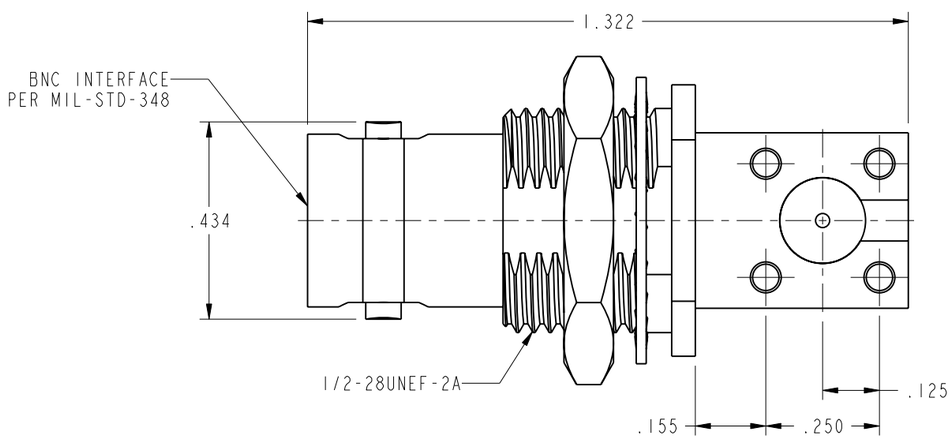

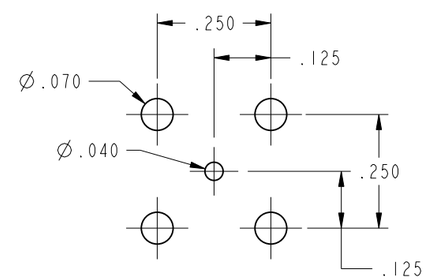

RECOMMENDED PCB LAYOUT

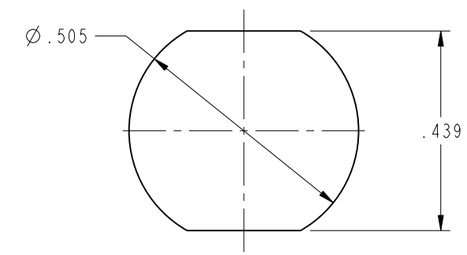

RECOMMENDED PANEL CUTOUT

CUSTOMER OUTLINE DRAWING

ALL OTHER SHEETS ARE FOR INTERNAL USE ONLY

UNLESS OTHERWISE SPECIFIED, DIMENSIONS ARE IN INCHES AND TOLERANCES ARE:
2 PLACE DECIMAL ±.015 (0,381 mm) | 3 PLACE DECIMAL ±.005 (0,127 mm) | ANGLES ± 1°

NOTICE - These drawings, specifications, or other data (1) are, and remain the property of Amphenol Corp. (2) must be returned upon request; and (3) are confidential and not to be disclosed to any person other than those to whom they are given by Amphenol Corp. The furnishing of these drawings, specifications, or other data by Amphenol Corp., or to any other person to anyone for any purpose is not to be regarded by implication or otherwise in any manner licensing, granting rights or permitting such holder or any other person to manufacture, use or sell any product, process or design, patented or otherwise, that may in any way be related to or disclosed by said drawings, specifications, or other data.

MATERIAL

REFERENCE

DRAWN T. SMITH	DATE 13-Aug-10	TITLE BNC RIGHT ANGLE 75 OHM PCB JACK BULK PACKED
ENGINEER T. SMITH	DATE 13-Aug-10	
APPROVED K. CAPOZZI	DATE 9/14/10	
CAD FILE 31-70221-4050		

Amphenol RF
Danbury, CT, USA
Tainan, Taiwan
Shenzhen, China
www.amphenolrf.com

SCALE: 2.0:1 | SHEET 2 OF 2

CODE ID	DWG SIZE	DRAWING NO.	REV
74868	B	31-70221-4050	J