ГК Атлант Инжиниринг – официальный представитель в РФ и СНГ
+7 (495) 109-02-08 sales@bbrc.ru www.bbrc.ru

THIRD ANGLE PROJ.

REVISIONS				
REV	DESCRIPTION	DATE	ECO	APPR
A	RELEASE TO MFG.	30-Dec-09	-----	SH

NOTES:

1. MATERIALS AND FINISHES:

   BODY - ZINC ALLOY, MATTE TIN PLATED (.000100" MIN.)
   SPRING CONTACT - BERYLLIUM COPPER, MATTE TIN PLATED (.000100" MIN.)
   CONTACT - PHOSPHOR BRONZE, SELECTIVE GOLD PLATED (.000030" MIN.)
   FERRULE - SOFT COPPER & BRASS, NICKEL PLATED (.000100" MIN.)
   INSULATOR - PTFE, COLOR: WHITE
   CLIP - PBT, COLOR: YELLOW
   HOUSING - PPE+PS, COLOR: SEE TABLE BELOW

   C01 CONNECTOR SUB-ASSEMBLY P/N : 903-847P-51S
   C04 CONNECTOR SUB-ASSEMBLY P/N : 903-848P-51S
   C01 CONTACTS MAY BE PURCHASED SEPARATELY AS P/N: FKCP03301A (5,000 PCS. REEL)
   C04 CONTACTS MAY BE PURCHASED SEPARATELY AS P/N: FKCP03302 (5,000 PCS. REEL)
   C01 FERRULE MAY BE PURCHASED SEPARATELY AS P/N: 923-10080 (100 PCS. TRAY)
   C04 FERRULE MAY BE PURCHASED SEPARATELY AS P/N: 923-10081 (100 PCS. TRAY)
   CABLE DEFINITIONS PER AMPHENOL REPORT DE825

2. ELECTRICAL:

   A. IMPEDANCE = 50 OHM, NOMINAL
   B. FREQUENCY RANGE = DC - 6 GHz,(OPTIMIZED FOR DC-4 GHz)
   C. VSWR = 1.4 (-15.6 dB), MAX.(DC-2 GHz)
   (MATED PAIR) 1.5 (-13.9 dB), MAX.(2-3 GHz)
   D. D.W.V. = 800 VRMS, MIN.

3. MECHANICAL:

   A. DURABILITY = 100 CYCLES MIN.
   B. TEMPERATURE RANGE = -40° C TO +85° C
   C. MECHANICAL PULL = 110 N MIN.

4. CONNECTOR ASSEMBLY:

   A. SEE 349-50767 FOR CONNECTOR ASSEMBLY INSTRUCTIONS
   B. SEE 349-50748 OR 349-50750 FOR TOOLING
   C. SEE 349-50747 FOR CONTACT CRIMPING CRITERIA

5. PACKAGING:

   A. PACKAGING TO BE MARKED: AMPHENOL RF
   3FAH-NXSJ-C00W6
   DATE CODE

6. ALL DIMENSIONS MECHANICAL & ELECTRICAL DESIGN COMPLY WITH DIN 72594-1 AND USCAR-18 SPEC.

CODING	DRAWING NO.	COLOR	RAL NO.
A	3FAH-NASJ-C00W6	JET BLACK	9005
B	3FAH-NBSJ-C00W6	CREAM	9001
C	3FAH-NCSJ-C00W6	SIGNAL BLUE	5005
D	3FAH-NDSJ-C00W6	CLARET VIOLET	4004
E	3FAH-NESJ-C00W6	LEAF GREEN	6002
F	3FAH-NFSJ-C00W6	NUT BROWN	8011
G	3FAH-NGSJ-C00W6	BLUE GREY	7031
H	3FAH-NHSJ-C00W6	HEATHER VIOLET	4003
I	3FAH-NISJ-C00W6	BEIGE	1001
K	3FAH-NKSJ-C00W6	CURRY	1027
L	3FAH-NLSJ-C00W6	CARMINE RED	3002
M	3FAH-NMSJ-C00W6	PASTEL ORANGE	2003
N	3FAH-NNSJ-C00W6	PASTEL GREEN	6019
Z	3FAH-NZSJ-C00W6	WATER BLUE	5021

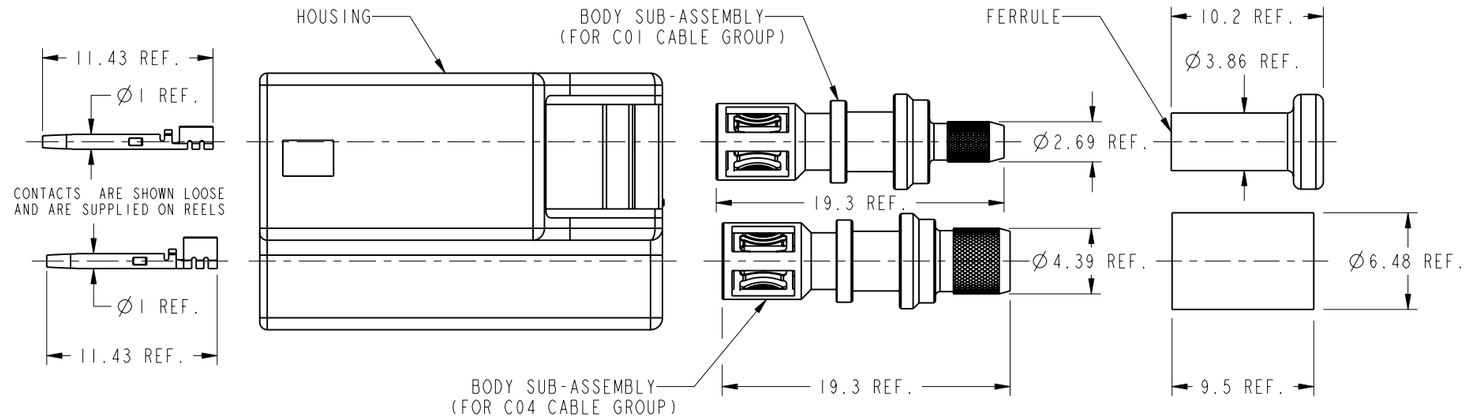

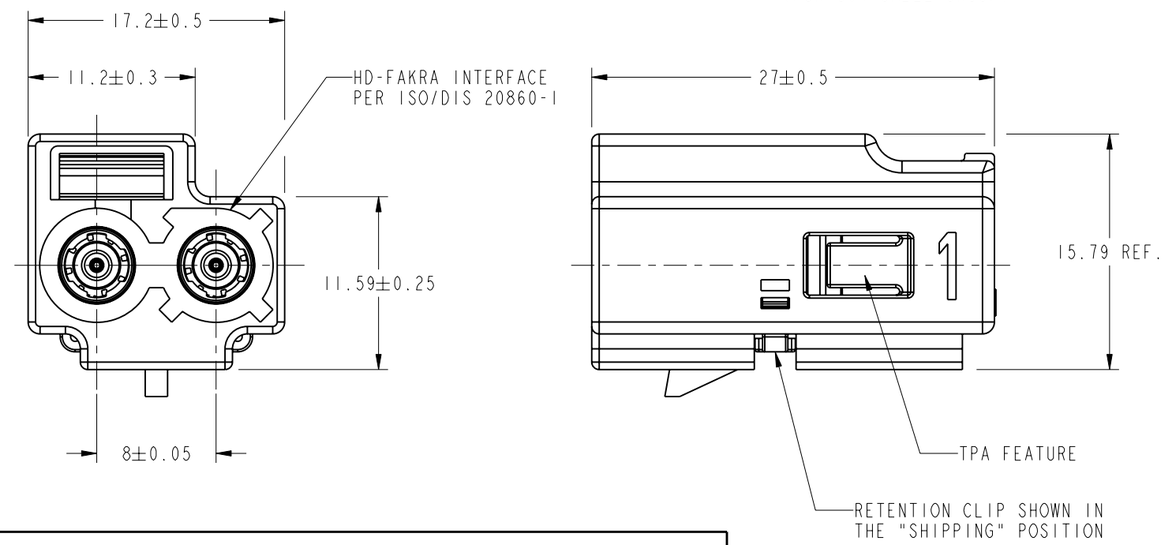

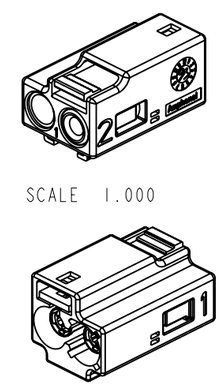

SCALE 1.000

CONFIGURATION CONTROL:
NO CHANGES PERMITTED TO DRAWING WITHOUT PPAP QUALIFIED CUSTOMER APPROVAL

CUSTOMER OUTLINE DRAWING
ALL OTHER SHEETS ARE FOR INTERNAL USE ONLY

UNLESS OTHERWISE SPECIFIED, DIMENSIONS ARE IN METRIC AND TOLERANCES ARE:
<0.5mm ± 0.05mm; 0.5 - 6mm ±0.1mm; 6 - 30mm ±0.2mm; 30 - 120mm ± 0.3mm; ANGLES ±1°

NOTICE - These drawings, specifications, or other data (1) are, and remain the property of Amphenol corp. (2) must be returned upon requiest; and (3) arre confidential and not to be disclosed to any person other than those to whom they are given by Amphenol Corp. the funishing of these drawings, specifications, or other data by Amphenol Corp., or to any other person to anyone for any purpose is not to be regarded by implicatioin or otherwise in any manner licensing, granting rights to permitting such holder or any other sperson to manufacture, use or sell any product, process or design, patented or otherwsie, that may in any way be related to or disclosed by said drawings, specifications, or other data.

MATERIAL: -

REFERENCE: EAR # 3306 AND REF: 2FAHENXSJ-C00W6

CONFIGURATION LEVEL: Prototype

FINISH

DRAWN J.YANG	DATE 03-Aug-09	TITLE 2-WAY HD-FAKRA JACK, CLOSED-ENTRY (GEN 3.0) 1-C01 PORT, 1-C04 PORT (CONTACT SOLD SEPARATELY)
ENGINEER J.YANG	DATE 21-Sep-09	
APPROVED B.C. GLEISSNER	DATE 21-Sep-09	SCALE: 3.0:1.0 SHEET 2 OF 2
CAD FILE I:\FAKRA\3FAH-NXSJ-C00W6		DWG SIZE B / REV A

Amphenol RF
Danbury CT USA, Tainan, Taiwan, Shenzhen, China
www.amphenolrf.com

DRAWING NO.	3FAH-NXSJ-C00W6
ITEM NO.	3FAH-NXSJ-C00W6
PART NO.	3FAH-NXSJ-C00W6