ГК Атлант Инжиниринг – официальный представитель в РФ и СНГ
+7 (495) 109-02-08 sales@bbrc.ru www.bbrc.ru

NOTES:
1. MATERIALS AND FINISHES:
   REAR BODY - BRASS, GOLD PLATED
   FRONT BODY,CONTACT - BeCu, GOLD PLATED
   INSULATOR - PTFE

2. ELECTRICAL:
   A. IMPEDANCE: 50 OHM

3. MECHANICAL:
   A. DURABILITY: 500 CYCLES MIN.
   B. TEMPERATURE RANGE: -65° C TO +165° C

4. PACKAGING:
   A. QUANTITY: SINGLE PACK
   B. 2 GASKETS,BRAID CLAMP AND CLAMP NUT ARE PACKAGED LOOSE.
   C. MARKING: BAG TO BE MARKED
      "AMPHENOL RF, 901-368-12, AND DATE CODE"

5 SHOWS CABLE ENTRY DIMENSIONS.

6. FOR CABLE ASSEMBLY INSTRUCTIONS,SEE SHEET 12
   OF AMPHENOL SPEC. 349-50114

7. CUSTOMER NOTE: SOLDER CONTACT TO CABLE AND CAP TO BODY

THIRD ANGLE PROJ.

REVISIONS				
REV	DESCRIPTION	DATE	ECO	APPR
--	RELEASE TO MFG.	----	----	----
T	REDRAWN IN PRO-E AND COD SHEET ADDED	10/1/12	49251	KR
U	MOVED STAMP PER SHT 1	12/10/14	50278	CPM

MIL-C-39012 INSPECTION

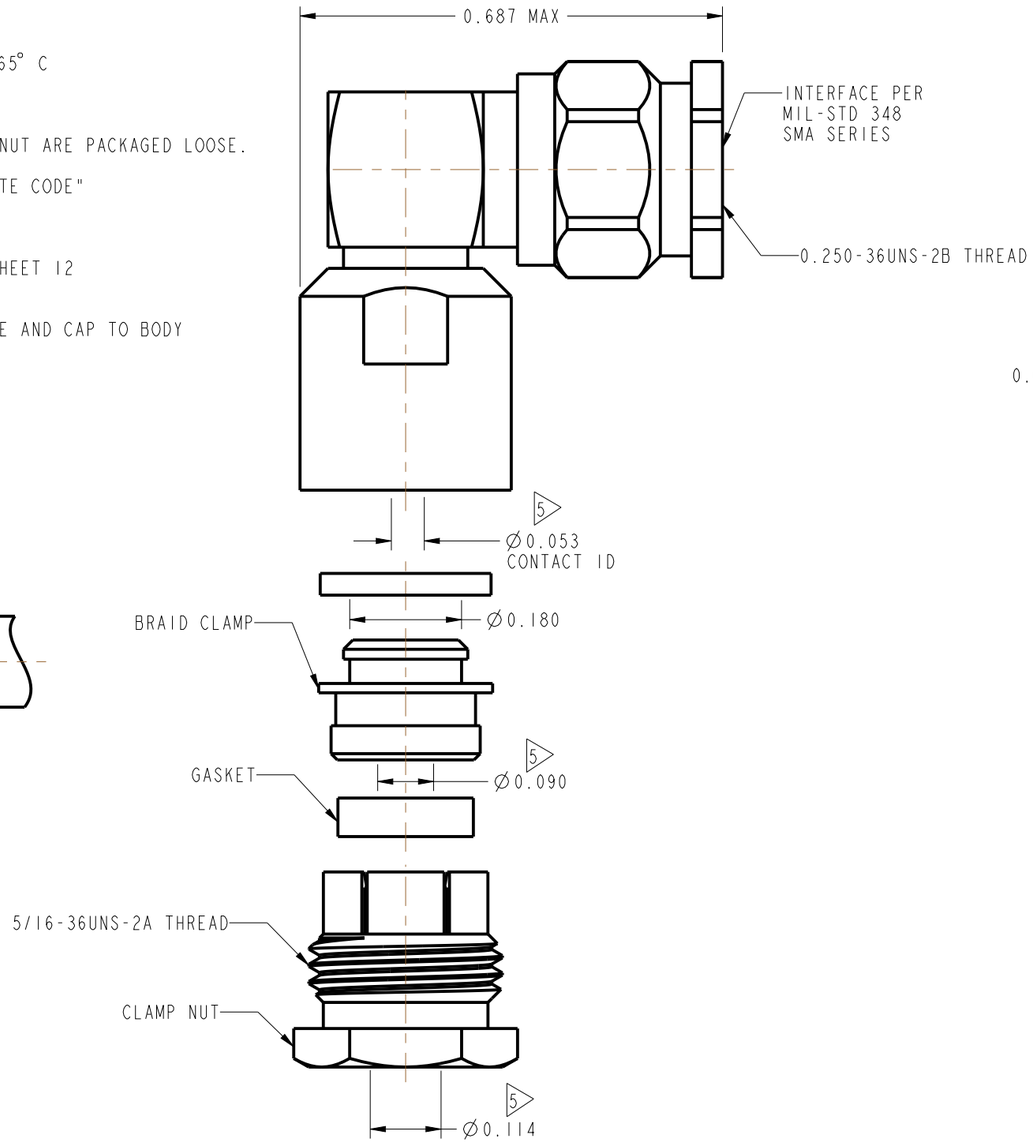

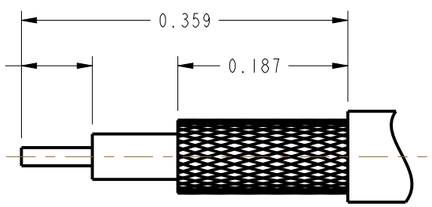

RECOMMENDED CABLE STRIPPING DIMENSIONS

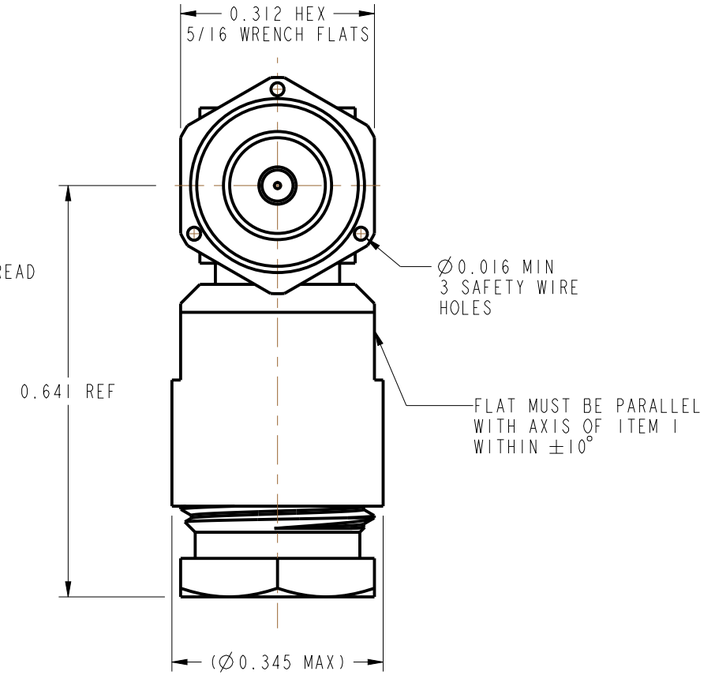

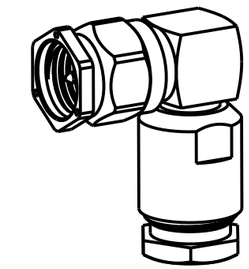

SCALE 2.000

CUSTOMER OUTLINE DRAWING
ALL OTHER SHEETS ARE FOR INTERNAL USE ONLY

UNLESS OTHERWISE SPECIFIED, DIMENSIONS ARE IN INCHES AND TOLERANCES ARE:
2 PLACE DECIMAL ±.015 (0,381 mm) | 3 PLACE DECIMAL ±.005 (0,127 mm) | ANGLES ± 1°

NOTICE - These drawings, specifications, or other data (1) are, and remain the property of Amphenol corp. (2) must be returned upon request; and (3) are confidential and not to be disclosed to any person other than those to whom they are given by Amphenol Corp. the furnishing of these drawings, specifications, or other data by Amphenol Corp., or to any other person to anyone for any purpose is not to be regarded by implication or otherwise in any manner licensing, granting rights to permitting such holder or any other person to manufacture, use or sell any product, process or design, patented or otherwise, that may in any way be related to or disclosed by said drawings, specifications, or other data.

MATERIAL: SEE NOTES

REFERENCE: DOR 311163-51, MIL-C-39012/56-4007
CONFIGURATION LEVEL: In Work

FINISH

DRAWN KARTHIK R	DATE 05-Sep-12	
ENGINEER K. CAPOZZI	DATE 05-Sep-12	
APPROVED K. CAPOZZI	DATE 9/12/12	
CAD FILE		

TITLE: SMA 90° PLUG CRIMP TYPE FOR RG-174/U & RG-188/U RG-316/U CABLE

SCALE: 4.1:1.0 | SHEET 2 OF 2
DWG SIZE: B | REV: U

Amphenol RF
www.amphenolrf.com

DRAWING NO. 901-368-12
ITEM NO. 901-368-12
PART NO. 901-368-12