Downloaded from Arrow.com.

REV.	DATE	ECR NO.	DESCRIPTION
A	01/30/04	–	UPDATE DRAWING FORMAT
B	10/05/04	–	MODIFY BODY HEX ORIENTATION
C	08/29/08	–	REVISE BARREL O.D./ REVISE FERRULE I.D. AND O.D.

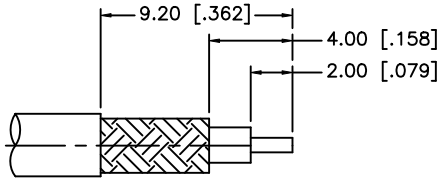

RECOMMENDED
CABLE STRIPPING DIM'S

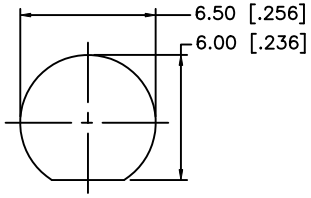

RECOMMENDED
MOUNTING HOLE

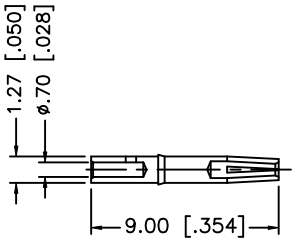

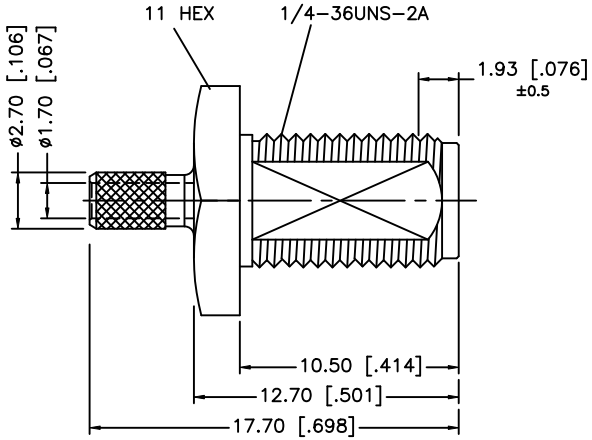

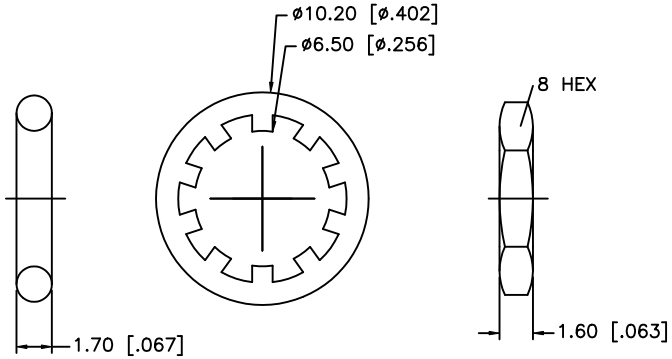

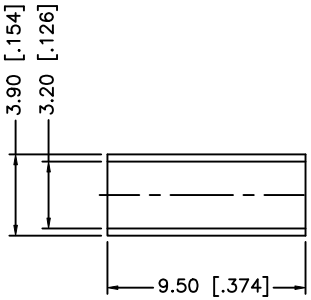

NOTE:
1. CRIMPED FERRULE HEX CRIMP SIZE .128" [3.25]
2. CONTACT PIN TO SOLDER

	DESCRIPTION	MATERIAL	FINISH	QTY
8				
7	FERRULE	COPPER	GOLD	1
6	HEX NUT	BRASS	GOLD	1
5	LOCK WASHER	BRASS	GOLD	1
4	GASKET	SILICONE	RED	1
3	CONTACT PIN	BER. COPPER	GOLD	1
2	INSULATOR	PTFE	NATURAL	1
1	BODY	BRASS	GOLD	1

UNLESS OTHERWISE SPECIFIED DIMENSIONS ARE IN MILLIMETERS. DIMENSIONS IN [ ] ARE IN INCHES AND FOR CUSTOMER REFERANCE ONLY.

UNLESS OTHERWISE SPECIFIED TOLERANCES FOR MILLIMETERS ARE:
0.5 – 8mm ± 0.20mm
8 – 30mm ± 0.40mm
30 – 120mm ± 0.50mm

UNLESS OTHERWISE SPECIFIED TOLERANCES FOR INCHES ARE:
.020 – .315 = ± 0.007"
.315 – 1.180 = ± 0.015"
1.180 – 4.724 = ± 0.020"

DO NOT SCALE DRAWING

APPROVALS		DATE
DRAWN	GRS	08/29/08
CHECKED		
ISSUED		
SHEET	1 OF 1	
CAD FILE	C:/132/132284.DWG	

Amphenol Connex

PART DESCRIPTION
SMA BULKHEAD CRIMP JACK O–RING SEAL
(FOR RG–174/U, 188A/U, 316/U CABLE)

PART NO. 132284

DWG. NO.	REV.	SIZE	SCALE
132284.DWG	C	A	NA