REVISIONS		
ISS	ZONE	DESCRIPTION\PER REQUEST\DATE
B	A-2	NO.3 WAS CHANGED\RD-DM06060901G\06-13-06'

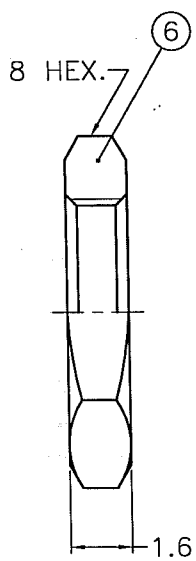

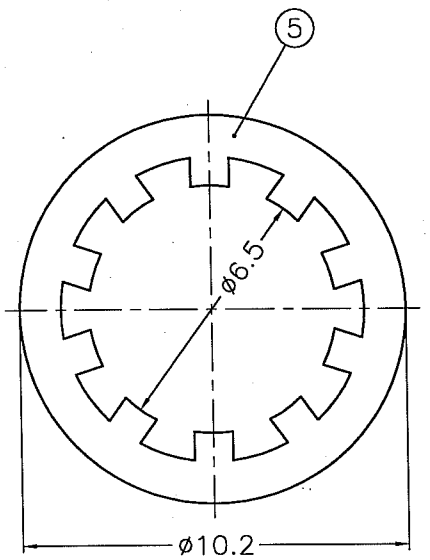

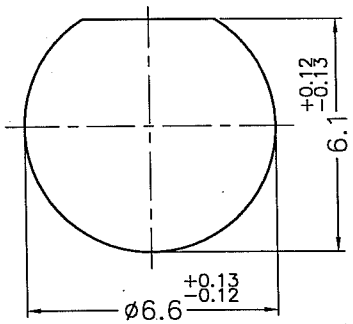

RECOMMENDED MOUNTING HOLE
(建議架設孔)

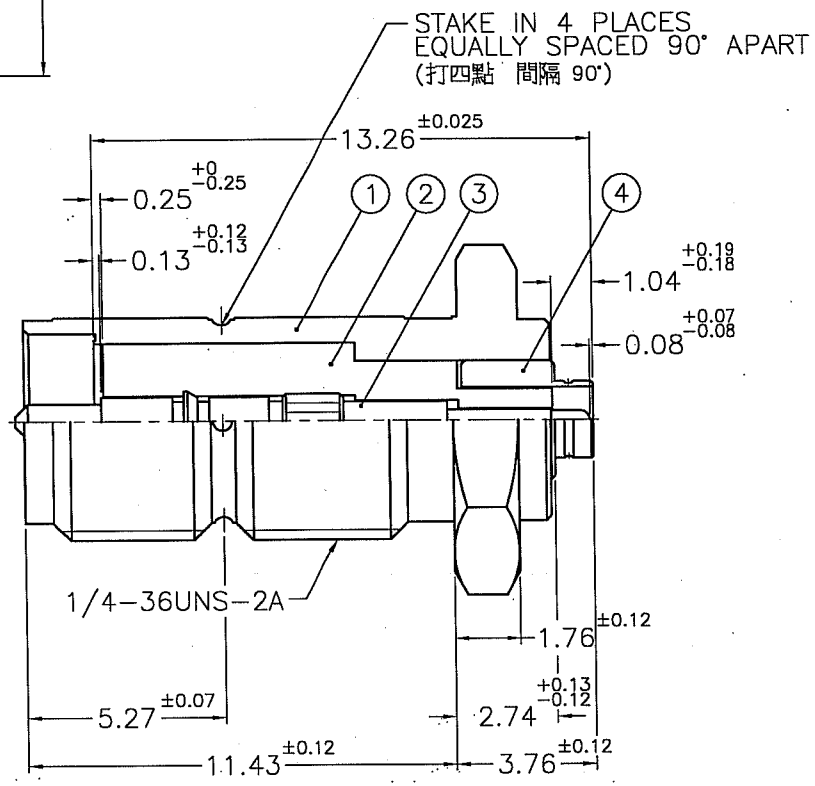

NOTES: FINISH (PLATING THICKNESS IN MICRO-INCHES)
1. BRASS PER QQ-B-626
2. BRASS PER QQ-B-613
3. ALBALOY PLATING (COPPER-TIN-ZINC) PL. 80 MIN. THICK
4. GOLD PL. 3 MIN. THICK OVER NICKEL PL. 100 MIN. THICK OVER COPPER STRIKE
5. GOLD PL. 30 MIN. THICK OVER NICKEL PL. 80 MIN. THICK OVER COPPER PL. 20 MIN. THICK
6. TEFLON MIL-P-19468

1. MAX. PANEL THICKNESS=3.18mm

NO.	DESCRIPTION	MATERIAL	FINISH	Q'TY	DRAWING NO.
6	HEX NUT	NOTE 1	NOTE 3	1	HN8-1/4-36X16
5	LOCK WASHER	NOTE 2	NOTE 3	1	LW-102/65X05
4	BODY	NOTE 1	NOTE 4	1	31-13133
3	CONTACT PIN	NOTE 1	NOTE 5	1	901-7259#B
2	INSULATOR	NOTE 6	NATURAL	1	901-7258
1	BODY	NOTE 1	NOTE 3	1	901-7257

DIMENSIONS ARE IN MILLIMETERS

UNLESS OTHERWISE SPECIFIED TOLERANCES
0.5-6 = ±0.2
6-30 = ±0.4
30-120 = ±0.6
120-315 = ±1
315-1000 = ±1.6
1000-2000 = ±2.4

SCALE 5/1 | ISSUE B

PART NO.

APPROVED Angela W DATE 06-13-06'

CHECKED DATE 06-13-06'

DRAWN DATE 06-13-06'

FILE NO. F:\DWG\CNPD\901\10097-XH-BXZ

Amphenol
Danbury,CT,USA-Tainan,Taiwan-Shenzhen,China

TITLE SMA REVERSE POLARITY BULKHEAD TO U.FL PLUG ADAPTER

DRAWING NO. 901-10097-XH

ITEM NO. 901-10097-XH

Downloaded from Arrow.com.