Downloaded from Arrow.com.

| REV. | DATE | DESCRIPTION |
|---|---|---|
| NC | 07/31/96 | INITIAL RELEASE |
| A | 11/16/05 | UPDATE DRAWING FORMAT |

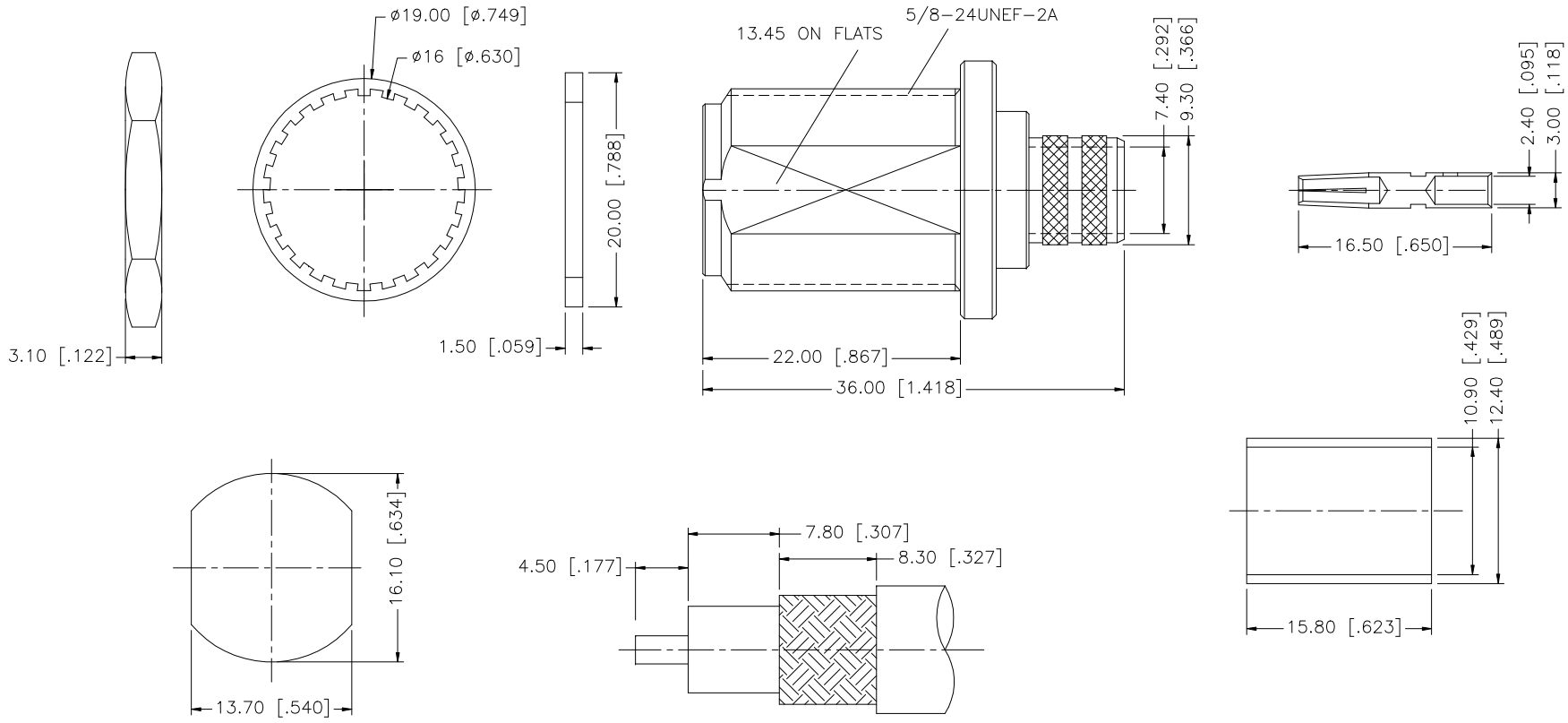


RECOMMENDED MOUNTING HOLE

RECOMMENDED CABLE STRIPPING DIMS.

NOTE:

1. CRIMPED FERRULE HEX CRIMP SIZE .429"
2. HEX CRIMP SIZE .100"

| | DESCRIPTION | MATERIAL | FINISH | QTY |
|---|---|---|---|---|
| 8 | FERRULE | COPPER | NEXCOTE | 1 |
| 7 | CONTACT PIN | PHOS. BRONZE | GOLD | 1 |
| 6 | HEX NUT | BRASS | NEXCOTE | 1 |
| 5 | LOCK WASHER | BRASS | NEXCOTE | 1 |
| 4 | GASKET | SILICONE | RED | 1 |
| 3 | BARREL | BRASS | NEXCOTE | 1 |
| 2 | INSULATOR | TEFLON | NATURAL | 1 |
| 1 | BODY | BRASS | NEXCOTE | 1 |

UNLESS OTHERWISE SPECIFIED DIMENSIONS ARE IN MILLIMETERS. DIMENSIONS IN [ ] ARE IN INCHES AND FOR CUSTOMER REFERANCE ONLY.

UNLESS OTHERWISE SPECIFIED TOLERANCES FOR MILLIMETERS ARE:
0.5 – 8mm ± 0.20mm
8 – 30mm ± 0.40mm
30 – 120mm ± 0.50mm

UNLESS OTHERWISE SPECIFIED TOLERANCES FOR INCHES ARE:
.020 – .315 = ± 0.007"
.315 – 1.180 = ± 0.015"
1.180 – 4.724 = ± 0.020"

DO NOT SCALE DRAWING

| APPROVALS | | DATE |
|---|---|---|
| DRAWN | G.R.S. | 11/16/05 |
| CHECKED | | |
| ISSUED | | |
| SHEET | 1 OF 1 | |
| CAD FILE | C:/172/172108.DWG | |

Amphenol Connex

PART DESCRIPTION: N BULKHEAD CRIMP JACK (FOR 8/U, 8A/U 213/U CABLE)

PART NO. 172108

| DWG. NO. | REV. | SIZE | SCALE |
|---|---|---|---|
| 172108.DWG | NC | A | NA |