REV	ECN	DESCRIPTION	DATE	MODIFIED
A		FIRST RELEASE	2018.11.16	T.H
B		MODIFY IP GRADE	2019.07.08	J.D

Amphenol PCDSZ
ORIGINAL
PDF Format
R&D

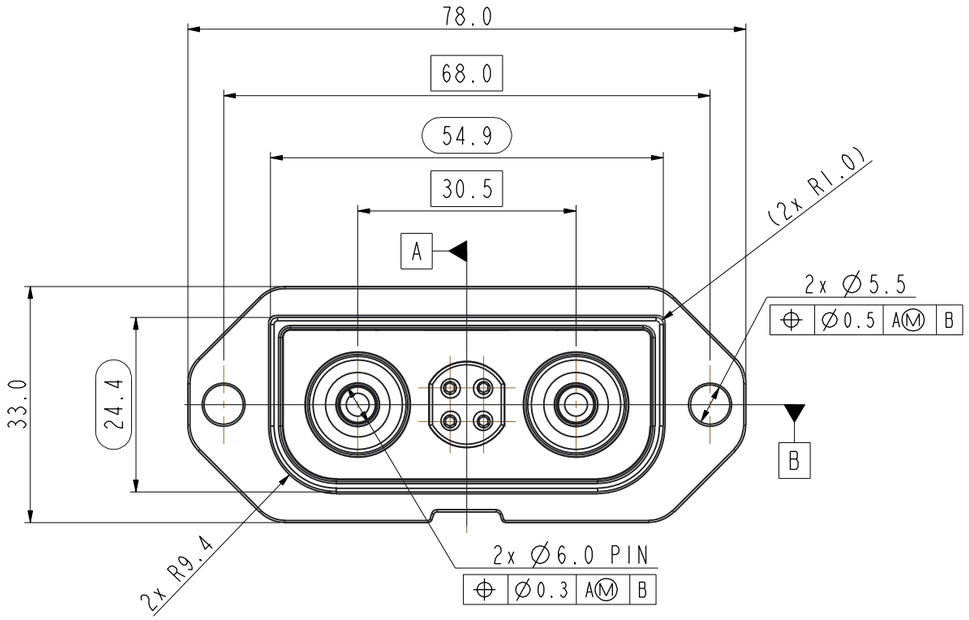

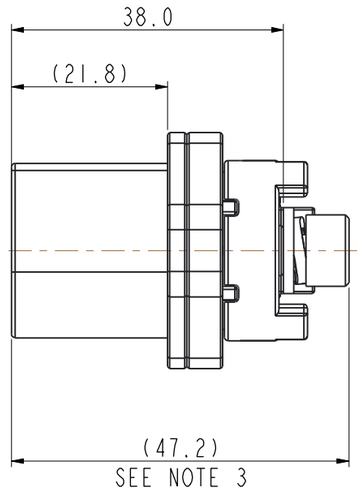

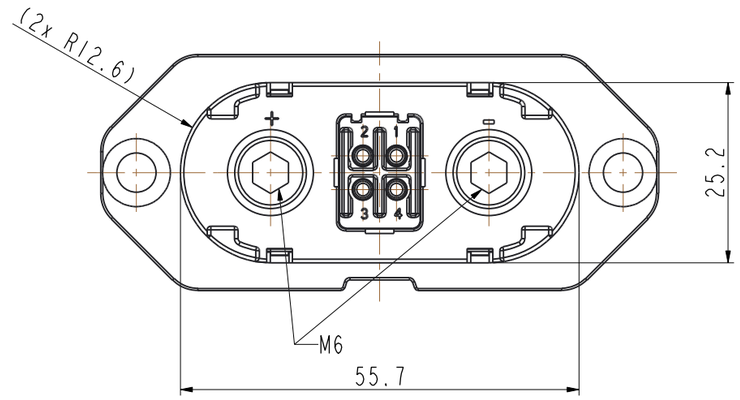

NOTES:
1. RECOMMED LOCKING TORQUE:
   M5: 4.1N.m; M6: 3.5N.m.
2. RECOMMED INSTALLED STUD IS M5 WITH PYRAMID STUD.
3. THE CONNECTOR WEIGHT IS ABOUT 0.12Kg.

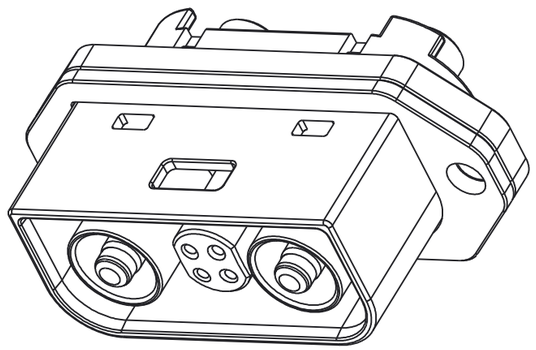

TECHNICAL DATA		FEATURE
RATED CURRENT (SIGNAL PIN)	5A.MAX.	✦
RATED CURRENT (POWER PIN)	80A.MAX.	✦
RATED VOLTAGE (SIGNAL PIN)	30V DC	✦
RATED VOLTAGE (POWER PIN)	250V DC	✦
AMBIENT TEMPERATURE	-30°C~+70°C	
DIELECTRIC WITHSTANDING VOLTAGE	1500V AC	✦
INSULATION RESISTANCE	200MΩ.MIN.	✦
IP GRADE △B	IP67	✦
MATING CYCLES	5000 CYCLES	◎
ROHS REGULATION	MEET	✦

"✦": CRITICAL FEATURE "◎":IMPORTANT FEATURE

DIMENSIONS	TOLERANCES	PROJECTION	Amphenol Pcd Shenzhen	TITLE
ANSI Y14.5M UNITS: MM Pro/E FILE	.X ±0.5 .XX ±0.05 ANGLES ±0.5°	◎	ENGR TOMMY.H 2018.11.16	HEV SOCKET
ORIGINAL	THIS DOCUMENT CONTAINS PROPRIETARY INFORMATION WHICH IS THE CONFIDENTIAL PROPERTY OF AMPHENOL PCD SHENZHEN		CHKD APPD	SIZE A3 / DWG NO. C-HEV080AF2P4SF / REV B
				CODE: 58982 / SCALE: / SHEET 1 OF 1

HEV080AF2P4SF

HEV080AF2P4SF