ГК Атлант Инжиниринг – официальный представитель в РФ и СНГ
+7 (495) 109-02-08 sales@bbrc.ru www.bbrc.ru

NOTES:

1. MATERIAL AND FINISHES
   BODY, BUSHING LOCK WASHER, HEX NUT- BRASS, SILVER PLATING
   CONTACT-BERYLIYUM COPPER, SILVER PLATING
   INSULATOR -PTFE
   GASKET-SILICONE
2. ELECTRICAL
   A. IMPEDANCE: 50 OHM
3. MECHANICAL
   A. DURABILITY: 500 CYCLES MIN.
   B. COUPLING TORQUE: 15 IN-LBS. MAX
   C. TEMPERATURE RANGE: -65°C TO 165°C
5. PACKAGING
   A. PACKAGE ADAPTER AS PER ROUTING INSTRUCTIONS
   B. MARK BAG OR TAG "AMPHENOLRF, 000-91100 YYWW"

91100	REVISIONS				
DRAWING NO.	REV	DESCRIPTION	DATE	ECO	APPR
THIRD ANGLE PROJ.	--	RELEASE TO MFG.	------	------	------
	AB	REDRAWN IN PRO-E, ADDED COD	1/14/13	48616	HR

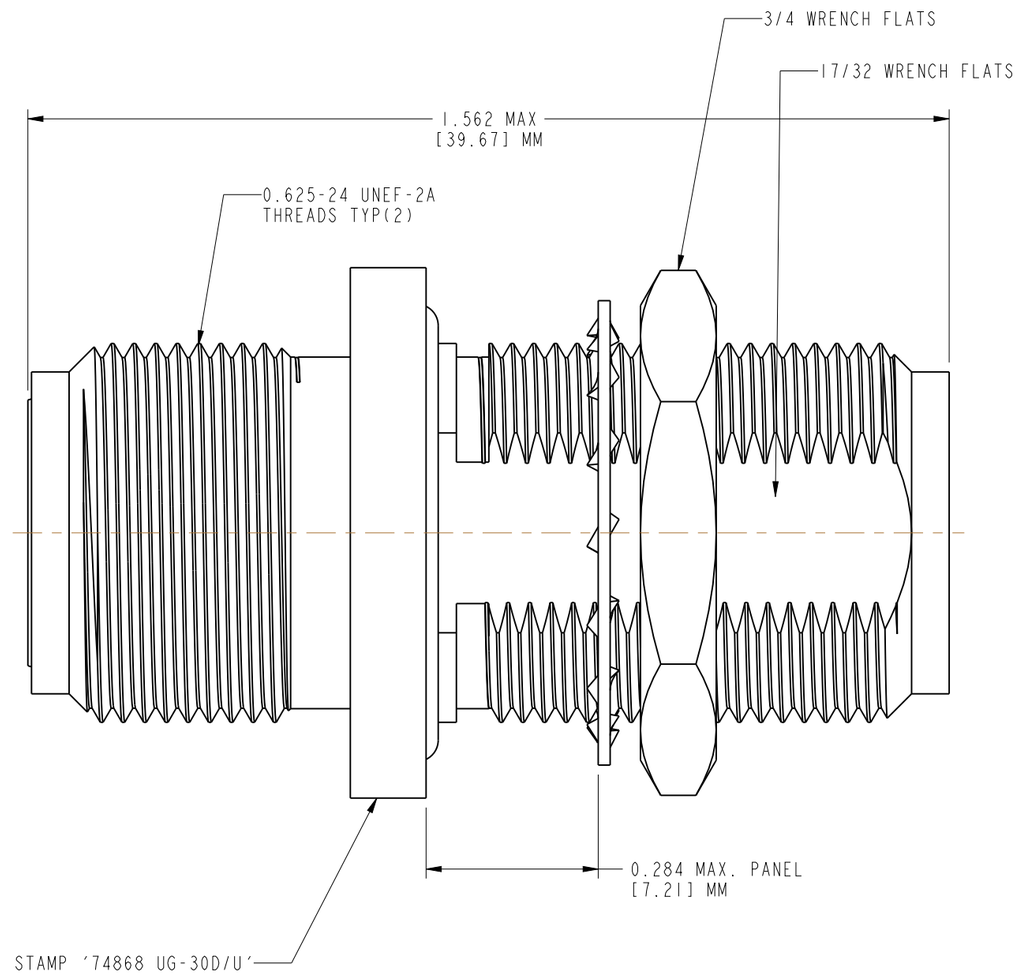

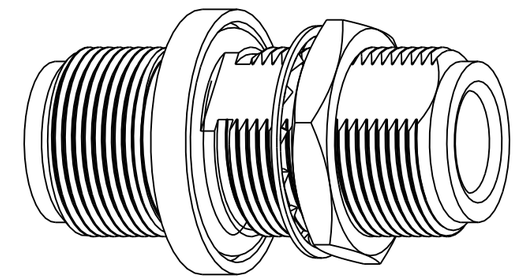

SCALE 2.000

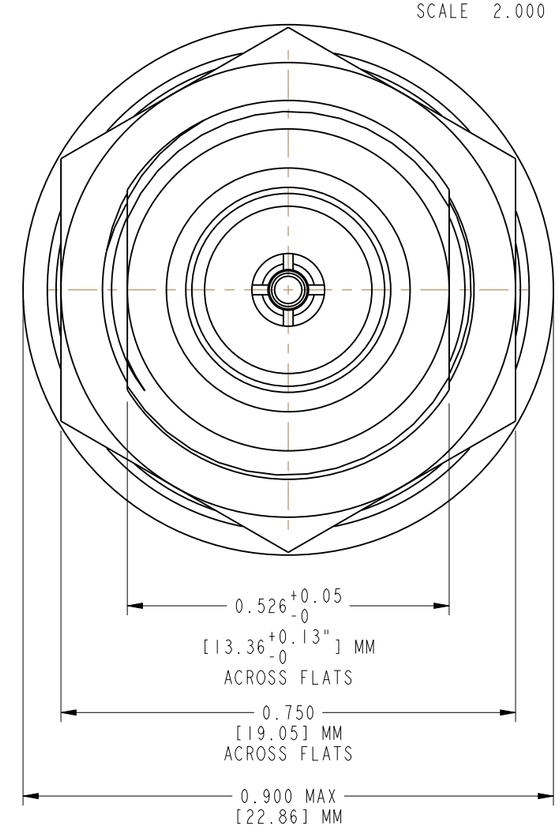

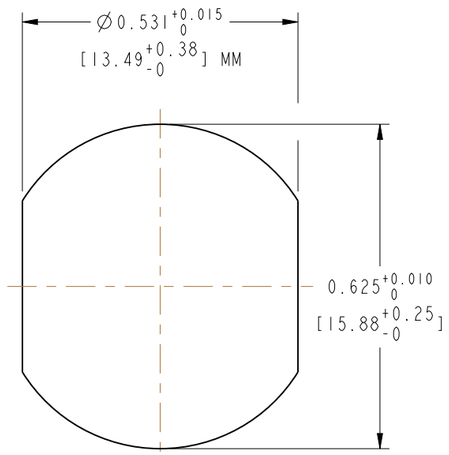

RECOMMENDED MOUNTING HOLE DIMENSIONS

CUSTOMER OUTLINE DRAWING

ALL OTHER SHEETS ARE FOR INTERNAL USE ONLY

UNLESS OTHERWISE SPECIFIED, DIMENSIONS ARE IN INCHES AND TOLERANCES ARE:
2 PLACE DECIMAL ±.015 (0,381 mm) 3 PLACE DECIMAL ±.005 (0,127 mm) ANGLES ± 1°

NOTICE - These drawings, specifications, or other data (1) are, and remain the property of Amphenol Corp. (2) must be returned upon request; and (3) are confidential and not to be disclosed to any person other than those to whom they are given by Amphenol Corp. The furnishing of these drawings, specifications, or other data by Amphenol Corp., or to any other person to anyone for any purpose is not to be regarded by implication or otherwise in any manner licensing, granting rights or permitting such holder or any other person to manufacture, use or sell any product, process or design, patented or otherwise, that may in any way be related to or disclosed by said drawings, specifications, or other data.

MATERIAL

REFERENCE

DRAWN HARI R	DATE 08-Jun-11	
ENGINEER HARI R	DATE 08-Jun-11	
APPROVED K. CAPOZZI	DATE 1/14/13	
CAD FILE		

TITLE
TYPE N ADAPTER
PRESSURIZED
JACK/JACK UG-30D

Amphenol
Amphenol Corporation
Communication and Network
Products Division
Danbury, CT U.S.A. 06810

SCALE: 1.0:1 | SHEET 2 OF 2

CODE ID	DWG SIZE	DRAWING NO.	REV
74868	B	91100	AB