ROHS COMPLIANT

REVISION HISTORY			
REV	DESCRIPTION	DATE	APPROVED
-	DCN 42283	04/16	STW

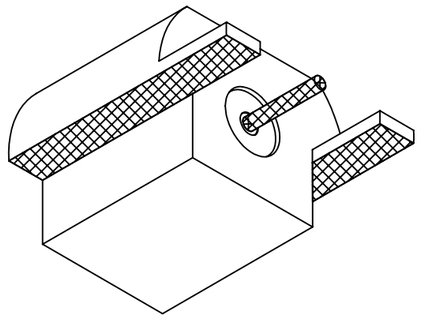

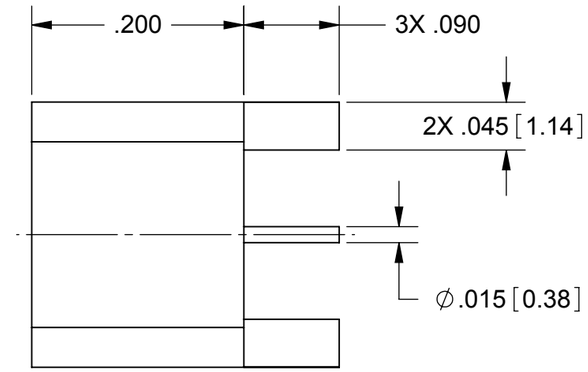

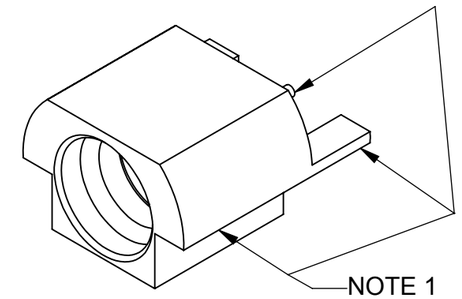

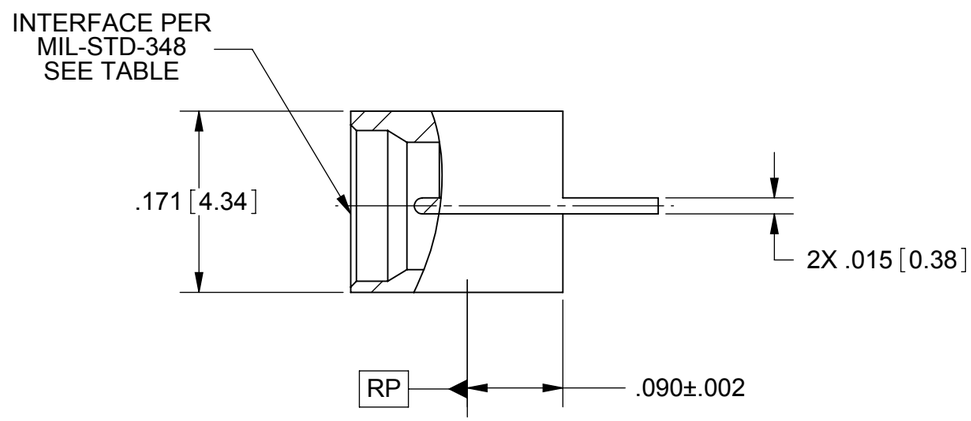

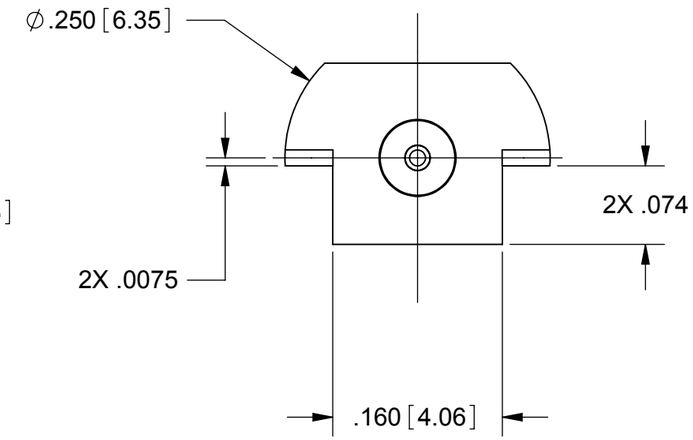

MATERIAL:

BODY: STAINLESS STEEL PER AMS-5640, ALLOY No. UNS S30300, TYPE 1

CONTACT: BERYLLIUM COPPER PER ASTM B196, ALLOY No. UNS C17300, TD04

INSULATOR: PTFE PER ASTM D1710, TYPE I, GRADE 1, CLASS B

FINISH:

BODY & CONTACT: GOLD PER ASTM B488, TYPE II, CODE C CLASS 1.27 OVER NICKEL PER AMS-QQ-N-290

PERFORMANCE:

IMPEDANCE: 50 OHMS
FREQ. RANGE: DC TO 18.0 GHz
INSUL. RES.: 5000 MEGOHMS, MIN.

NOTES:
1. CENTER PIN, POSTS, AND CONNECTOR PCB MOUNT AREA TO BE PRE-TINNED USING Sn96 SOLDER.
2. ALL DIMENSIONS APPLY PRIOR TO PRE-TINNING.

PART NUMBER	INTERFACE
1211-66137-TD	FULL DETENT
1211-66138-TD	LIMITED DETENT
1211-66139-TD	SMOOTH BORE

MATERIAL: SEE NOTES
FINISH: SEE NOTES
SURFACE AREA: N/A

PROPRIETARY

THE INFORMATION CONTAINED IN THIS DRAWING IS THE SOLE PROPERTY OF SV MICROWAVE, INC. ANY REPRODUCTION IN PART OR AS A WHOLE WITHOUT THE WRITTEN PERMISSION OF SV MICROWAVE, INC IS PROHIBITED.

DIMENSIONS ARE IN INCHES TOLERANCES:
FRACTIONAL: ±1/64 ANGULAR: X° ±1°0' X°X' ±15'
DECIMAL: .X ±.030 .XX ±.010 .XXX ±.005
INTERPRET DIMENSIONS AND TOLERANCES PER ASME Y14.5M - 1994

THIRD ANGLE PROJECTION

UNLESS OTHERWISE SPECIFIED
1) ALL DIMENSIONS ARE IN INCHES [MILLIMETERS]
2) ALL DIMENSIONS ARE AFTER PLATING.
3) BREAK CORNERS & EDGES .005 R. MAX.
4) CHAM. 1ST & LAST THREADS.
5) SURFACE ROUGHNESS 63₊MIL-STD-10.
6) DIA.'S ON COMMON CENTERS TO BE CONCENTRIC WITHIN .005 T.I.R.
7) REMOVE ALL BURRS

DRAWN:	MAL	04/26/16
CHECKED:	STW	04/26/16
APPROVED:	STW	04/26/16

SV Microwave, Inc.
2400 Centrepark West Drive, Suite 100
West Palm Beach, FL 33409

TITLE: SMP MALE PCB EDGE MOUNT

SIZE	CAGE CODE	DWG. NO.
B	95077	1211-66137-66139-TD

SCALE: 16:1 SHEET 1 OF 1

Downloaded from Arrow.com.