REV.	DATE	DESCRIPTION
A	06/05/03	UPDATE DRAWING FORMAT

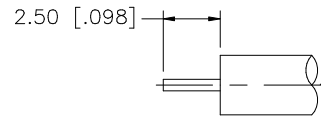

RECOMMENDED CABLE STRIPPING DIM'S

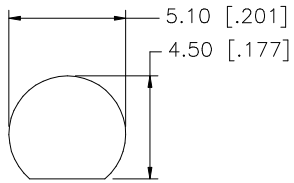

RECOMMENDED MOUNTING HOLE

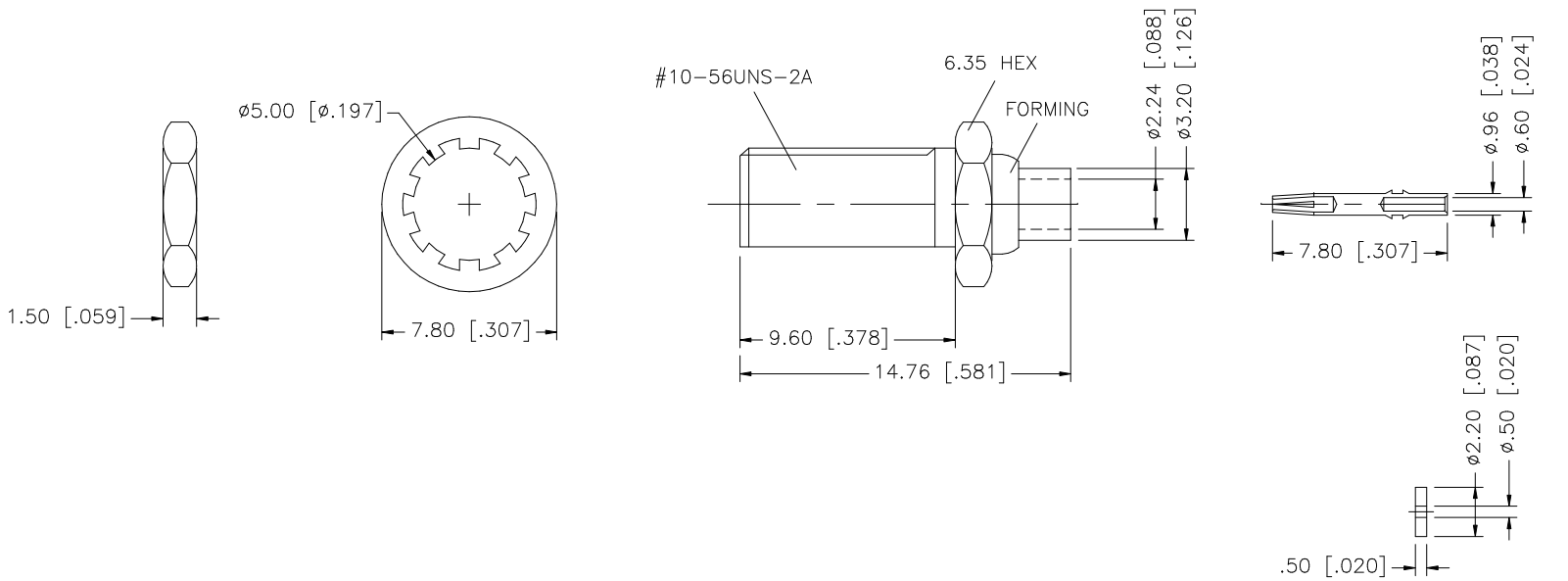

NOTES:

1. CONTACT PIN TO SOLDER
2. MAX. PANEL THICKNESS = 6.8mm

	DESCRIPTION	MATERIAL	FINISH	QTY
8				
7				
6	HEX NUT	BRASS	GOLD	1
5	LOCK WASHER	BRASS	GOLD	1
4	INSULATOR	TEFLON	NATURAL	1
3	CONTACT PIN	BER. COPPER	GOLD	1
2	INSULATOR	TEFLON	NATURAL	1
1	BODY	BRASS	GOLD	1

UNLESS OTHERWISE SPECIFIED DIMENSIONS ARE IN MILLIMETERS. DIMENSIONS IN [ ] ARE IN INCHES AND FOR CUSTOMER REFERANCE ONLY.

UNLESS OTHERWISE SPECIFIED TOLERANCES FOR MILLIMETERS ARE:
0.5 – 8mm ± 0.20mm
8 – 30mm ± 0.40mm
30 – 120mm ± 0.50mm

UNLESS OTHERWISE SPECIFIED TOLERANCES FOR INCHES ARE:
.020 – .315 = ± 0.007"
.315 – 1.180 = ± 0.015"
1.180 – 4.724 = ± 0.020"

DO NOT SCALE DRAWING

APPROVALS		DATE
DRAWN	G.R.S.	06/05/03
CHECKED		
ISSUED		
SHEET	1 OF 1	
CAD FILE	C:/252/252163.DWG	

Amphenol Connex

PART DESCRIPTION
MCX BULKHEAD DIRECT SOLDER JACK (FOR .085"' .086" SEMI RIGID CABLE)

PART NO. 252163

DWG. NO.	REV.	SIZE	SCALE
252163.DWG	A	A	NA

Downloaded from Arrow.com.