ГК Атлант Инжиниринг – официальный представитель в РФ и СНГ
+7 (495) 109-02-08 sales@bbrc.ru www.bbrc.ru

KATHREIN

8-Port Antenna	B1	B2	Y1	Y2
Frequency Range	1710–2170	1710–2170	2490–2690	2490–2690
Dual Polarization	X	X	X	X
HPBW	65°	65°	60°	60°
Adjust. Electr. DT set by *FlexRET*	2°–11°	2°–11°	2°–14°	2°–14°

AISG Antenna Interface Standards Group

8-Port Antenna 1710–2170/1710–2170/2490–2690/2490–2690 65°/65°/60°/60° 17.5/17.5/18/18dBi 2°–11°/2°–11°/2°–14°/ 2°–14° T

Type No.		80010728			
		B1, connector 1–2			Y1, connector 5–6
		1710–2170			2490–2690
Frequency Range	MHz	1710 – 1880	1850 – 1990	1920 – 2170	2490 – 2690
Gain at mid Tilt	dBi	17.3	17.8	17.8	18.1
Gain over all Tilts	dBi	17.2 ± 0.4	17.7 ± 0.3	17.7 ± 0.3	17.8 ± 0.4
Horizontal Pattern:					
Azimuth Beamwidth	°	67 ± 3.1	64 ± 2.4	63 ± 3.1	56 ± 3.7
Front-to-Back Ratio, Total Power, ± 30°	dB	> 26	> 26	> 26	> 24
Cross Polar Discrimination at Boresight	dB	> 22	> 22	> 22	> 25
Cross Polar Discrimination over Sector	dB	> 13.5	> 12.5	> 10.5	> 9.5
Azimuth Beam Port-to-Port Tracking	dB	< 1.5	< 1.5	< 1.0	< 1.0
Vertical Pattern:					
Elevation Beamwidth	°	6.7 ± 0.4	6.3 ± 0.3	5.9 ± 0.5	4.8 ± 0.3
Electrical Downtilt continuously adjustable	°	2.0 – 11.0			2.0 – 14.0
Tilt Accuracy	°	< 0.3	< 0.3	< 0.3	< 0.2
First Upper Side Lobe Suppression	dB	> 18	> 18	> 17	> 16
Upper Side Lobe Suppression, 20° Sector above Main Beam	dB	> 16	> 17	> 17	> 16
Cross Polar Isolation	dB	> 28			> 28
Port to Port Isolation	dB	> 30 (B1 // B2, Y1, Y2)			> 30 (Y1 // B1, B2, Y2)
Max. Effective Power per Port	W	200 (at 50 °C ambient temperature)			
Max. Effective Power Port 1–2 + Port 5–6	W	400 (at 50 °C ambient temperature)			

Values based on NGMN-P-BASTA (version 9.6) requirements.

936.5282/a ngmn 04.18.06.07 Subject to alteration.

Kathrein USA Greenway Plaza II, 2400 Lakeside Blvd., Suite 650, Richardson TX 75082
Phone: 214.238.8800 Fax: 214.238.8801 Email: info@kathrein.com

ГК Атлант Инжиниринг – официальный представитель в РФ и СНГ
+7 (495) 109-02-08 sales@bbrc.ru www.bbrc.ru

		B2, connector 3–4			Y2, connector 7–8
		1710–2170			2490–2690
Frequency Range	MHz	1710 – 1880	1850 – 1990	1920 – 2170	2490 – 2690
Gain at mid Tilt	dBi	17.3	17.8	17.8	17.9
Gain over all Tilts	dBi	17.2 ± 0.4	17.7 ± 0.3	17.7 ± 0.2	17.6 ± 0.6
Horizontal Pattern:					
Azimuth Beamwidth	°	67 ± 3.8	64 ± 2.3	63 ± 3.1	56 ± 3.5
Front-to-Back Ratio, Total Power, ± 30°	dB	> 25	> 26	> 26	> 23
Cross Polar Discrimination at Boresight	dB	> 21	> 21	> 21	> 23
Cross Polar Discrimination over Sector	dB	> 14.5	> 12.0	> 11.0	> 9.0
Azimuth Beam Port-to-Port Tracking	dB	< 1.5	< 1.0	< 0.5	< 1.5
Vertical Pattern:					
Elevation Beamwidth	°	6.8 ± 0.4	6.3 ± 0.3	6.0 ± 0.4	4.8 ± 0.3
Electrical Downtilt continuously adjustable	°	2.0 – 11.0			2.0 – 14.0
Tilt Accuracy	°	< 0.3	< 0.3	< 0.3	< 0.3
First Upper Side Lobe Suppression	dB	> 17	> 17	> 16	> 16
Upper Side Lobe Suppression, 20° Sector above Main Beam	dB	> 16	> 17	> 16	> 16
Cross Polar Isolation	dB	> 28			> 28
Port to Port Isolation	dB	> 30 (B2 // B1, Y1, Y2)			> 30 (Y2 // B1, B2, Y1)
Max. Effective Power per Port	W	200 (at 50 °C ambient temperature)			
Max. Effective Power Port 3–4 + Port 7–8	W	400 (at 50 °C ambient temperature)			

Values based on NGMN-P-BASTA (version 9.6) requirements.

936.5282/a ngmn 04.18.06.07 Subject to alteration.

All specifications are subject to change without notice.
The latest specifications are available at www.kathreinusa.com

Kathrein USA Greenway Plaza II, 2400 Lakeside Blvd., Suite 650, Richardson TX 75082
Phone: 214.238.8800 Fax: 214.238.8801 Email: info@kathrein.com

ГК Атлант Инжиниринг – официальный представитель в РФ и СНГ
+7 (495) 109-02-08 sales@bbrc.ru www.bbrc.ru

8-Port Antenna

KATHREIN

Electrical specifications, all systems		
Impedance	Ω	50
VSWR		< 1.5
Return Loss	dB	> 14
Interband Isolation	dB	> 30
Passive Intermodulation	dBc	< –150 (2 x 43 dBm carrier)
Polarization	°	+45, –45
Max. Effective Power for the Antenna	W	700 (at 50 °C ambient temperature)

Values based on NGMN-P-BASTA (version 9.6) requirements.

Mechanical specifications		
Input		8 x 7-16 female
Connector Position		bottom
Adjustment Mechanism		FlexRET, continuously adjustable
Wind load (at Rated Wind Speed: 150 km/h)	N | lbf	Frontal: 570 | 128 Maximal: 625 | 141
Max. Wind Velocity	km/h mph	200 124
Height / Width / Depth	mm inches	1471 / 275 / 103 57.9 / 10.8 / 4.1
Category of Mounting Hardware		M (Medium)
Weight	kg lb	17.0 / 19.2 (clamps incl.) 37.5 / 42.3 (clamps incl.)
Packing Size	mm inches	1666 / 298 / 136 65.6 / 11.7 / 5.4
Scope of Supply		Panel, FlexRET and 2 units of clamps for 42–115 mm | 1.7–4.5 inches diameter

Accessories (order separately if required)

Type No.	Description	Remarks mm | inches	Weight approx. kg | lb	Units per antenna
731651	1 clamp	Mast diameter: 28 – 60 | 1.1 – 2.4	0.8 | 1.8	2
85010002	1 clamp	Mast diameter: 110 – 220 | 4.3 – 8.7	2.7 | 6.0	2
85010003	1 clamp	Mast diameter: 210 – 380 | 8.3 – 15.0	4.8 | 10.6	2
737978	1 downtilt kit	Downtilt angle: 0° – 8°	2.3 | 5.1	1
86010154	Site Sharing Adapter	3-way (see figure below)	0.7 | 1.5	
86010155	Site Sharing Adapter	6-way (see figure below)	1.4 | 3.1	
86010162	Gender Adapter	Solely to be used in combination with the FlexRET module 86010153V01	0.045 | 0.099	1
86010163	Port Extender		0.16 | 0.35	1

Accessories (included in the scope of supply)

738546	1 clamp	Mast diameter: 42 – 115 | 1.7 – 4.5	1.1 | 2.4	2
86010153V01	FlexRET			1

For downtilt mounting use the clamps for an appropriate mast diameter together with the downtilt kit.
Wall mounting: No additional mounting kit needed.

Material: **Reflector screen:** Aluminum. **Radiator:** Tin-plated zinc.
Flat fiberglass radome: The max. radome depth is only 103 mm | 4.0 inches.
Fiberglass material guarantees optimum performance with regards to stability, stiffness, UV resistance and painting. The color of the radome is grey.
All screws and nuts: Stainless steel or hot-dip galvanized steel.

Grounding: The metal parts of the antenna including the mounting kit and the inner conductors are DC grounded.

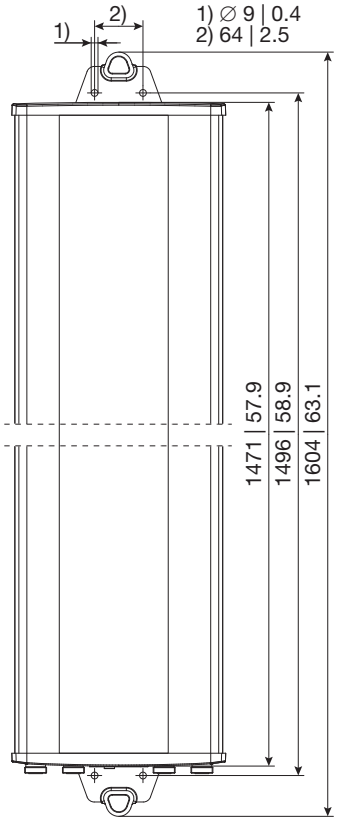

All dimensions in mm | inches

Configuration example with Site Sharing Adapter 86010154

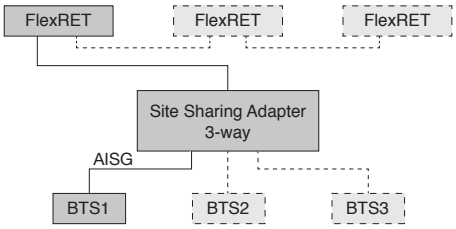

Configuration example with Site Sharing Adapter 86010155

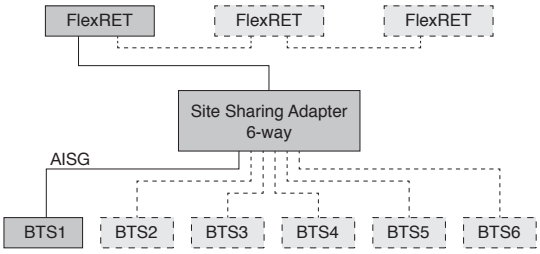

For more information please refer to the respective data sheets.

All specifications are subject to change without notice.
The latest specifications are available at www.kathreinusa.com

Kathrein USA Greenway Plaza II, 2400 Lakeside Blvd., Suite 650, Richardson TX 75082
Phone: 214.238.8800 Fax: 214.238.8801 Email: info@kathrein.com

936.5282/a ngmn 04.18.06.07 Subject to alteration.

ГК Атлант Инжиниринг – официальный представитель в РФ и СНГ
+7 (495) 109-02-08 sales@bbrc.ru www.bbrc.ru

Layout of interface:

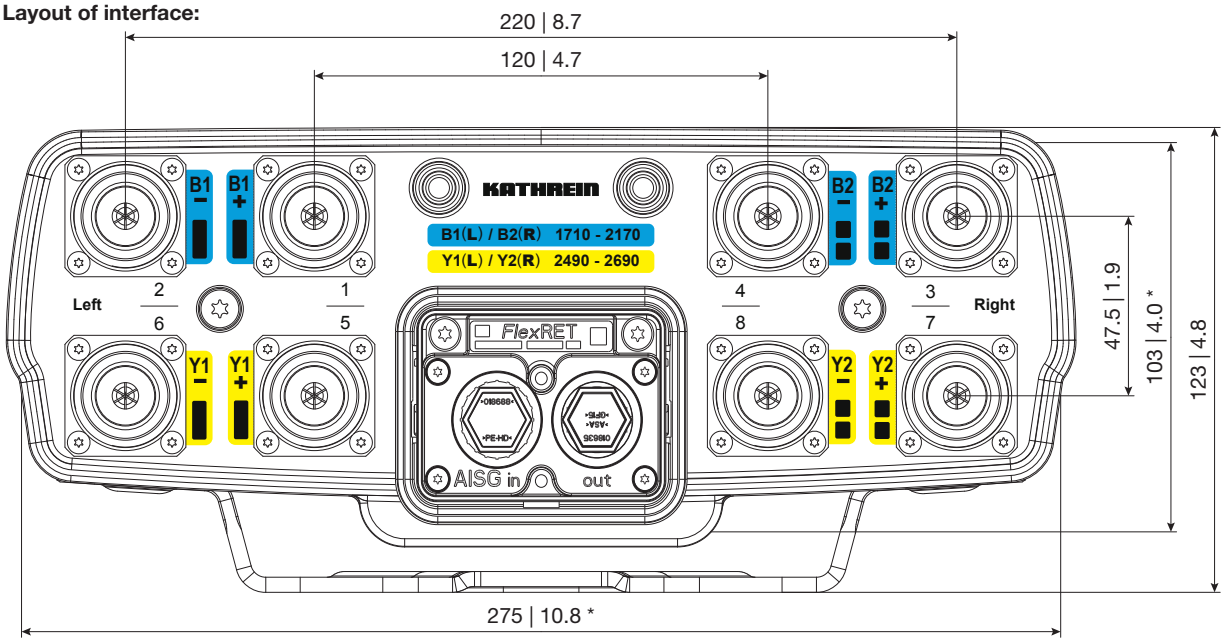

Bottom view
* Dimensions refer to radome
All dimensions in mm | inches

Correlation Table

Frequency range	Band	Connector
1710–2170 MHz	B1	1–2
1710–2170 MHz	B2	3–4
2490–2690 MHz	Y1	5–6
2490–2690 MHz	Y2	7–8

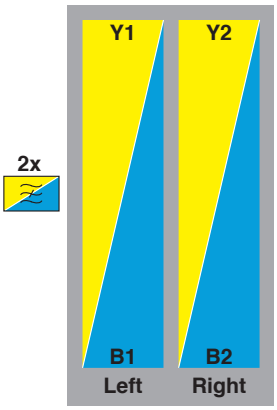

936.5282/a ngmn 04.18.06.07 Subject to alteration.

Any previous data sheet issues have now become invalid.

All specifications are subject to change without notice.
The latest specifications are available at www.kathreinusa.com

Kathrein USA Greenway Plaza II, 2400 Lakeside Blvd., Suite 650, Richardson TX 75082
Phone: 214.238.8800 Fax: 214.238.8801 Email: info@kathrein.com

ГК Атлант Инжиниринг – официальный представитель в РФ и СНГ
+7 (495) 109-02-08 sales@bbrc.ru www.bbrc.ru

General Information about Panel Antennas

KATHREIN

Environmental conditions:

Kathrein cellular antennas are designed to operate under the environmental conditions as described in ETS 300 019-1-4 class 4.1 E.
The antennas exceed this standard with regard to the following items:
– Low temperature: –55 °C
– High temperature (dry): +60 °C
For antennas equipped with FlexRET: The electrical downtilt adjusting is designed to operate under the environmental conditions as described in the valid data sheet of the FlexRET.

Ice protection: Due to the very sturdy antenna construction and the protection of the radiating system by the radome, the antenna remains operational even under icy conditions.

Environmental tests:

Kathrein antennas fulfil the stated specifications after completion of the environmental tests as defined in ETS 300 019-2-4. The homogenous design of Kathrein's antenna families uses identical modules and materials.
Extensive tests have been performed on typical samples and modules. The vibration test has been adapted relating to frequency and acceleration to the conditions of mast mounted antennas.

Please note:

As a result of more stringent legal regulations and judgements regarding product liability, we are obliged to point out certain risks that may arise when products are used under extraordinary operating conditions.

The mechanical design is based on the environmental conditions as stipulated in ETS 300 019-1-4. Wind loads are calculated according to DIN 1055-4.
The antennas may be used at locations where the anticipated peak wind velocity or gust wind speed lies within the maximum wind speed listed in the data sheet. We warrant the mechanical safety and electrical functionality under such conditions. The wind speeds are defined in accordance with the DIN, EN or TIA standards. This warranty makes allowance for the partial safety factors specified in those standards.
Extraordinary operating conditions, such as heavy icing or exceptional dynamic stress (e.g. strain caused by oscillating support structures), may result in the breakage of an antenna or even cause it to fall to the ground. These facts must be considered during the site planning process.

The details given in our data sheets have to be followed carefully when installing the antennas and accessories.
Site planning and installation must be carried out by qualified and experienced staff. All relevant national safety regulations must be upheld and respected. Incorrect site planning, faulty installation, as well as interfering surroundings on site, may lead to deviations in the electrical parameters compared to those specified in the respective data sheets.
The connectors on this product are only suitable for connecting to the compatible counterpart. Please ensure that the connected cable has been fitted with a connector of the same standard, otherwise damage may occur.

The tilt values will be set to any arbitrary value in the given tilt range. These values are independent from the frequency band or antenna type and can vary between antennas and bands.

EU-RED

Hereby, Kathrein Werke KG declares that the radio equipment is in compliance with Directive 2014/53/EU. The full text of the EU declaration of conformity is available at the following internet address: http://www.kathrein.com

936.4694/d Subject to alteration.

Our quality assurance system and our environmental management system apply to the entire company and are certified by TÜV according to EN ISO 9001 and EN ISO 14001.

Our products are compliant to the EU Directive RoHS as well as to other environmentally relevant regulations (e.g. REACH).

All specifications are subject to change without notice.
The latest specifications are available at www.kathreinusa.com

Kathrein USA Greenway Plaza II, 2400 Lakeside Blvd., Suite 650, Richardson TX 75082
Phone: 214.238.8800 Fax: 214.238.8801 Email: info@kathrein.com

ГК Атлант Инжиниринг – официальный представитель в РФ и СНГ
+7 (495) 109-02-08 sales@bbrc.ru www.bbrc.ru

FlexRET

KATHREIN

A flexible, integrated solution for adjusting the electrical downtilt of Kathrein FlexRET antennas.

- Compliant to 3GPP/AISG 2.0
- Single RETs or Multi RET displayed
- Two way antenna sharing feasibility
- Daisy Chain feasibility
- Pre-configured

Type No.		86010153V01
Protocols		compliant to 3GPP/AISG 2.0
Logical interface ex factory		3GPP/AISG 2.0
Operates as		Single RETs or Multi RET
Ex factory		Single RETs
Input voltage range	V	10 ... 30 (pin 6)
Power consumption	W	Typically < 1; < 10 (motor activated)
Connectors		2 x 8 pin connector according to IEC 60130-9; according to AISG-C 485 Daisy chain in: male; Daisy chain out: female
Hardware interfaces		RS 485A/B (pin 5, pin 3); power supply (pin 6); DC return (pin 7); according to AISG / 3GPP
Adjustment time (full range)	sec	40 (typically, depending on antenna type)
Adjustment cycles		> 50,000
Temperature range	°C	–40 … +60
Protection class		IP 24 (installed)
Lightning protection		AISG interface (each pin) 2.5 kA (10/350 µs) 8 kA (8/20 µs) according to IEC 61000-4-5
Housing material		Profile: Aluminum anodized; cover: Aluminum die cast coated
Weight	g lb	350 0.77
Packing size (H x W x D)	mm inches	245 x 93 x 102 9.6 x 3.6 x 4
Dimensions (H x W x D)	mm inches	142 x 71 x 51 5.6 x 2.8 x 2

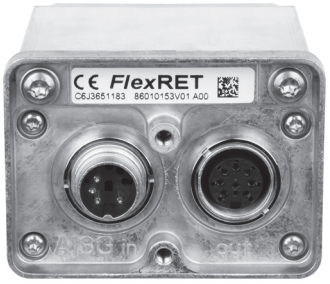

Please note:
If the Primary which controls the FlexRET system does not support the default ex-factory interface setting, then the FlexRET must be switched to the appropriate standard of the Primary before installation. Please contact Kathrein for further information.

If the FlexRET of an antenna has to be replaced, the FlexRET gets the information stored in the antenna after power on automatically. It is not necessary to configure the FlexRET manually.

Standards:
EN 60950-1 (Safety)
EN 60950-22 (Safety – Equipment installed outdoor)
EN 55022 (Emission)
EN 55024 (Immunity)
ETS 300019-1-4 (Environmental)
UL 60950-1; 1st edition

Certification: CE, FCC

Scope of supply: FlexRET

Optional:

Site Sharing Adapter (86010154 or 86010155) to create independent logical interfaces at one antenna or site. Makes it possible to operate with more than one independent Node B.

Gender Adapter (86010162) to convert the AISG out (female) to an AISG in (male) port in order to operate one FlexRet with exactly 2 BTS.
Detailed information is given in the data sheet of the Gender Adapter.

Port Extender (86010163) to convert the existing AISG input and output in order to operate FlexRet with exactly 2 BTS while maintaining the daisy chain capability.
Detailed information is given in the data sheet of the Port Extender.

Please note:
In general, the addressing of the FlexRET is automatically performed. Only in case the FlexRET is manually addressed, the serial number has to be extended by the corresponding colour coding extension (e.g. CSG351234-**R1**). The respective information can be found on the site documentation which is
included in the scope of supply.

936.5204/b Subject to alteration.

Kathrein USA Greenway Plaza II, 2400 Lakeside Blvd., Suite 650, Richardson TX 75082
Phone: 214.238.8800 Fax: 214.238.8801 Email: info@kathrein.com

ГК Атлант Инжиниринг – официальный представитель в РФ и СНГ
+7 (495) 109-02-08 sales@bbrc.ru www.bbrc.ru

Startup of FlexRET

The FlexRET module included in the antenna is preconfigured with the following information: Antenna model no., Antenna Serial no., Antenna configuration data. After connecting a control cable and scanning the antenna line devices (ALD) the used primary (e.g. NodeB, ALC, etc.) will find the FlexRET. You only need to insert your additional data.

Connecting the control cables:

Connect a control cable to the daisy chain input of the FlexRET. The tightening torque for fixing the connector must be 0.5 – 1.0 Nm ('hand-tightened').
The connector should be tightened by hand or by a special torque screw driver (order no. 85010080).
See also data sheet for Kathrein AISG-cable (86010007, ...).
Please note: To ensure the tightness of the RET System, Kathrein recommend the use of Kathrein components only.
Please note: If the daisy chain output is not used, do not remove the protection cap.

For daisy chain operation, remove the protection cap and attach a control cable to interconnect with the daisy chain input of the subsequent FlexRET or external RCU.
Please note: Do not remove the protection cap on the daisy chain output of the last FlexRET or RCU device.

936.5204/b Subject to alteration.

All specifications are subject to change without notice.
The latest specifications are available at www.kathreinusa.com

Kathrein USA Greenway Plaza II, 2400 Lakeside Blvd., Suite 650, Richardson TX 75082
Phone: 214.238.8800 Fax: 214.238.8801 Email: info@kathrein.com

ГК Атлант Инжиниринг – официальный представитель в РФ и СНГ
+7 (495) 109-02-08 sales@bbrc.ru www.bbrc.ru

FCC – Statements

FCC § 15.19

This device complies with Part 15 of the FCC rules. Operation is subject to the following two conditions: (1) This device may not cause harmful interference, and (2) this device must accept any interference received, including interference that may cause undesired operation.

FCC § 15.105

Note: This equipment has been tested and found to comply with the limits for a Class B digital device, pursuant to part 15 of the FCC Rules. These limits are designed to provide reasonable protection against harmful interference in a residential installation. This equipment generates, uses and can radiate radio frequency energy and, if not installed and used in accordance with the instructions, may cause harmful interference to radio communications. However, there is no guarantee that interference will not occur in a particular installation. If this equipment does cause harmful interference to radio or television reception, which can be determined by turning the equipment off and on, the user is encouraged to try to correct the interference by one or more of the following measures:

—Reorient or relocate the receiving antenna.
—Increase the separation between the equipment and receiver.
—Connect the equipment into an outlet on a circuit different from that to which the receiver is connected.
—Consult the dealer or an experienced radio/TV technician for help.

Canada CNR-Gen Section 7.1.3

This device complies with Industry Canada licence-exempt RSS standard(s). Operation is subject to the following two conditions:(1) this device may not cause interference, and (2) this device must accept any interference, including interference that may cause undesired operation of the device.

Le présent appareil est conforme aux CNR d'Industrie Canada applicables aux appareils radio exempts de licence. L'exploitation est autorisée aux deux conditions suivantes : (1) l'appareil ne doit pas produire de brouillage, et (2) l'utilisateur de l'appareil doit accepter tout brouillage radioélectrique subi, même si le brouillage est susceptible d'en compromettre le fonctionnement.

ICES-003

This Class B digital apparatus complies with Canadian ICES-003.

Cet appareil numérique de la classe B est conforme à la norme NMB-003 du Canada.

FCC § 15.21 (Warning Statement)

[Any] changes or modifications not expressly approved by the party responsible for compliance could void the user's authority to operate the equipment.

936.5204/b Subject to alteration.

Kathrein USA Greenway Plaza II, 2400 Lakeside Blvd., Suite 650, Richardson TX 75082
Phone: 214.238.8800 Fax: 214.238.8801 Email: info@kathrein.com

ГК Атлант Инжиниринг – официальный представитель в РФ и СНГ
+7 (495) 109-02-08 sales@bbrc.ru www.bbrc.ru

Compliance Information Statement (Declaration of Conformity Procedure)

Responsible Party: Kathrein USA

Address: Greenway Plaza II 2400 Lakeside Blvd. Suite 650
Richardson, Texas 75082

Telephone: (01+) 214.238.8800

Type of equipment:

Model Name: FlexRET
FCC ID SP3-86010153

EU-RED

Hereby, Kathrein Werke KG declares that the radio equipment type 86010153V01 is in compliance with Directive 2014/53/EU. The full text of the EU declaration of conformity is available at the following internet address: http://www.kathrein.com

936.5204/b Subject to alteration.

All specifications are subject to change without notice.
The latest specifications are available at www.kathreinusa.com

Kathrein USA Greenway Plaza II, 2400 Lakeside Blvd., Suite 650, Richardson TX 75082
Phone: 214.238.8800 Fax: 214.238.8801 Email: info@kathrein.com

ГК Атлант Инжиниринг – официальный представитель в РФ и СНГ
+7 (495) 109-02-08 sales@bbrc.ru www.bbrc.ru

Mounting Hardware
Clamp Included in the Scope of Supply

KATHREIN

Suitable for mast diameter	(mm) [inches]	42 – 115 [1.65 – 4.53]
Antenna – mast distance	(mm) [inches]	20 – 25 [0.79 – 0.98]
Material of clamp and screws		Hot-dip galvanized steel / stainless steel
Weight	(kg) [lb]	1.1 [2.43]

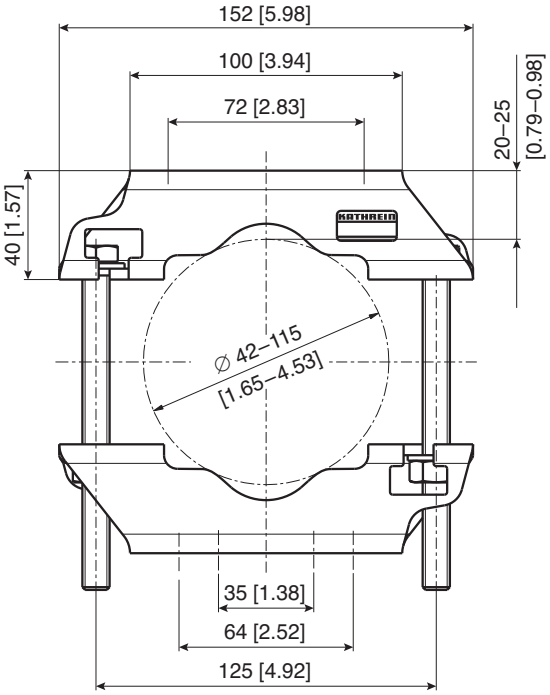

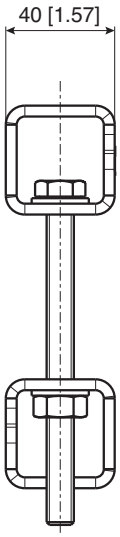

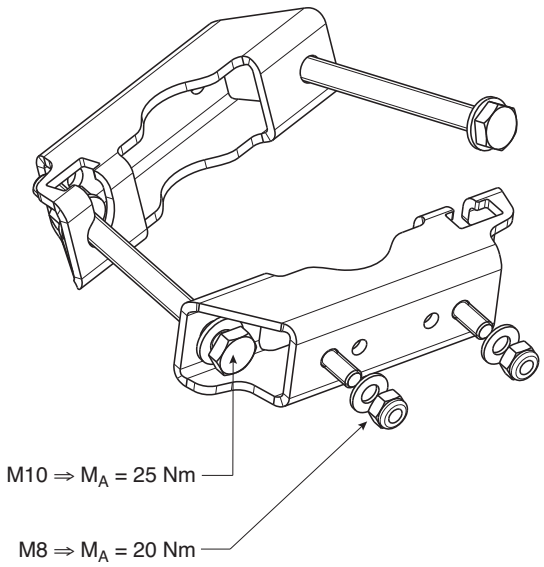

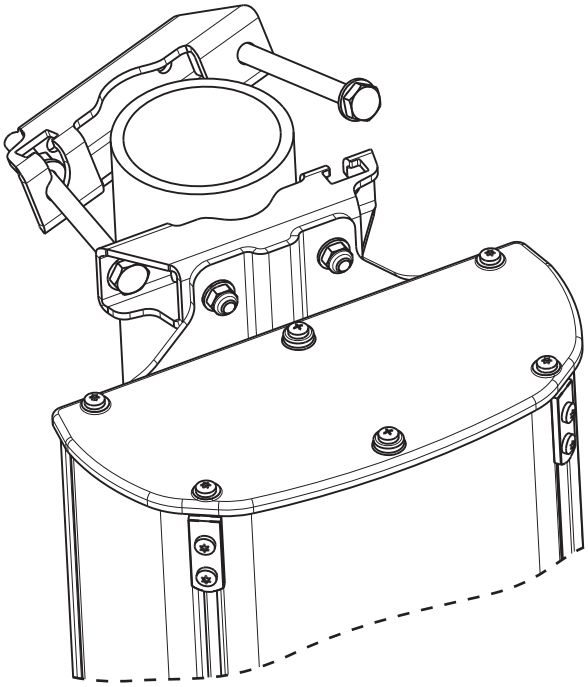

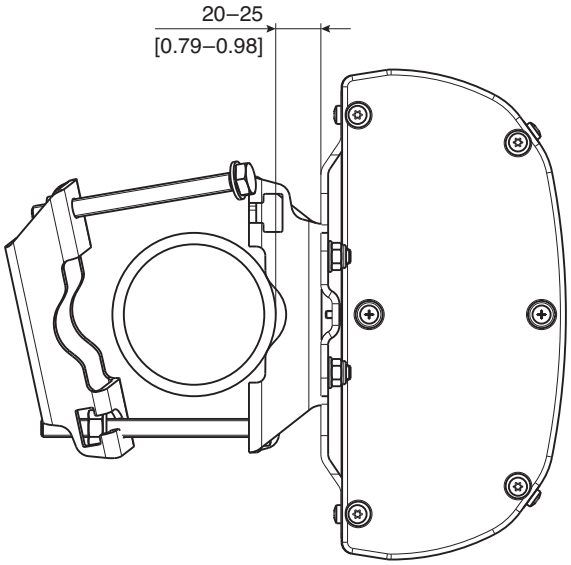

936.3920/c Subject to alteration.

Please note: Kathrein does not recommend to use counter nuts.
The additional nuts supplied are only meant as spares.

All dimensions in mm and [inches]

All specifications are subject to change without notice.
The latest specifications are available at www.kathreinusa.com

Kathrein USA Greenway Plaza II, 2400 Lakeside Blvd., Suite 650, Richardson TX 75082
Phone: 214.238.8800 Fax: 214.238.8801 Email: info@kathrein.com