ГК Атлант Инжиниринг – официальный представитель в РФ и СНГ
+7 (495) 109-02-08 sales@bbrc.ru www.bbrc.ru

NOTES:

1. MATERIALS AND FINISHES:
   BODY - BRASS, GOLD PLATING
   CONTACT - BeCu, GOLD PLATING
   INSULATOR - PTFE

2. ELECTRICAL:
   A. IMPEDANCE: 50 OHM
   B. FREQUENCY RANGE: 0-26.5 GHz
   C. VSWR: 1.05+0.02 f (GHz) MAX. @ 0-18 GHz
      1.5 MAX. @ 18-26.5 GHz
   C. D.W.V: 500 VRMS.
   D. INSULATION RESISTANCE: 1000 MΩ MIN.
   E. CONTACT RESISTANCE:
      CENTER CONATCT - INITIAL 3.0 MΩ MAX.
      AFTER ENVIRONMENTAL 4.0 MΩ MAX.
      OUTER CONATCT - INITIAL 2.0 MΩ MAX.
      AFTER ENVIRONMENTAL NOT APPLICABLE

3. MECHANICAL:
   A. DURABILITY: 500 CYCLES MIN.
   B. TEMPERATURE RANGE: -65°C TO +165°C
   C. ENGAGE/DISENGAGE TORQUE: 2 INCH-LBS MIN.
   D. MATING TORQUE: 7-10 IN-LBS WHEN BODY SUPPORTED WITH WRENCH
      8 IN-LBS MAX. UNSUPPORTED
   E. CONTACT RETENTION: 4 LBS MIN. AXIAL FORCE ON PCB END
      4 IN-OZ MIN. RADIAL TORQUE

4. PACKAGING:
   A. QUANTITY: SINGLE PACK
   B. MARKING: BAG TO BE MARKED
      "AMPHENOLRF, 901-10511-1, AND DATE CODE"

THIRD ANGLE PROJ.

REVISIONS

REV	DESCRIPTION	DATE	ECO	APPR
A	RELEASE TO MFG.	11-Jul-16	01361	KCE

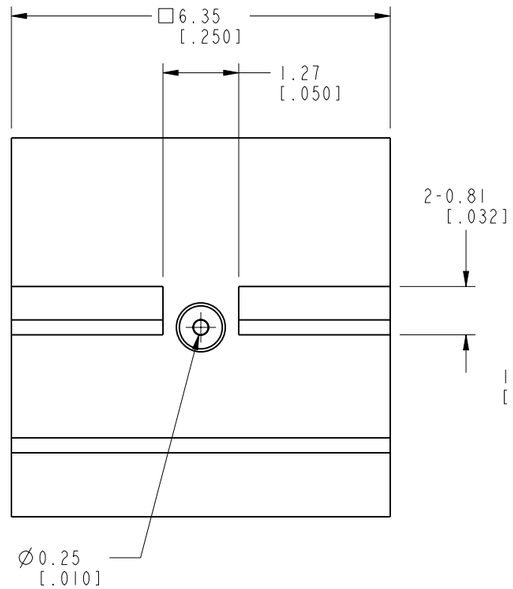

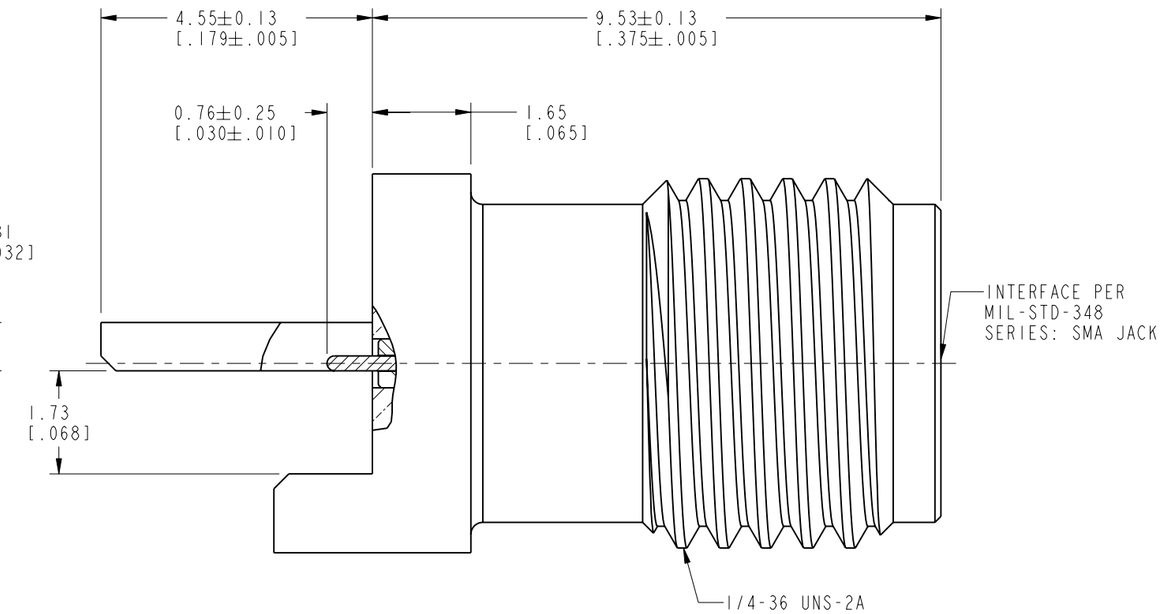

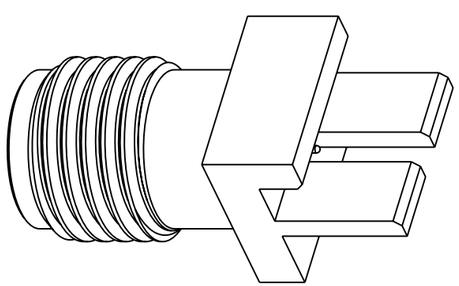

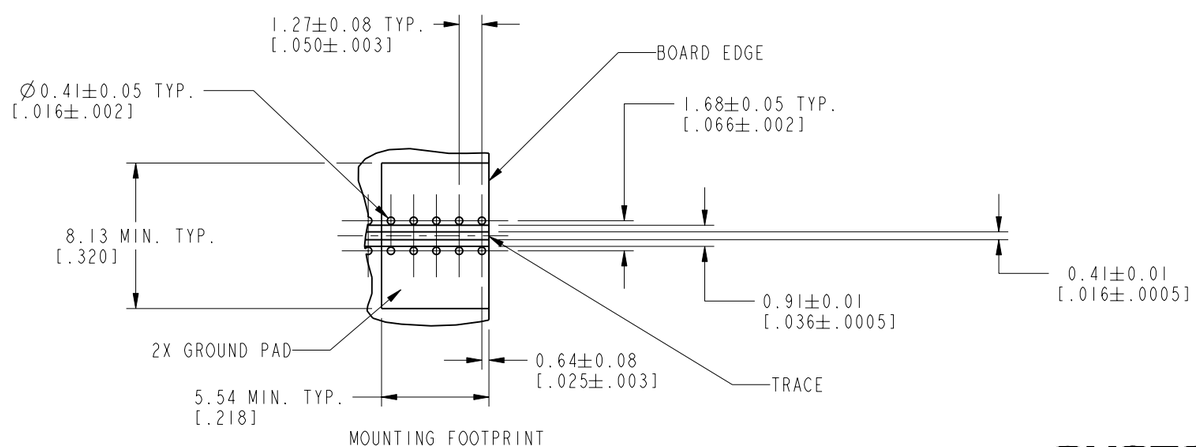

CUSTOMER OUTLINE DRAWING

ALL OTHER SHEETS ARE FOR INTERNAL USE ONLY

UNLESS OTHERWISE SPECIFIED, DIMENSIONS ARE IN METRIC AND TOLERANCES ARE:

<0.5mm	0.5 - 6mm	6 - 30mm	30 - 120mm	ANGLES
± 0.05mm	±0.1mm	±0.2mm	± 0.3mm	±1°

NOTICE - These drawings, specifications, or other data (1) are, and remain the property of Amphenol corp. (2) must be returned upon request; and (3) are confidential and not to be disclosed to any person other than those to whom they are given by Amphenol Corp. the furnishing of these drawings, specifications, or other data by Amphenol Corp., or to any other person to anyone for any purpose is not to be regarded by implication or otherwise in any manner licensing, granting rights to permitting such holder or any other person to manufacture, use or sell any product, process or design, patented or otherwise, that may in any way be related to or disclosed by said drawings, specifications, or other data.

MATERIAL
SEE NOTES

REFERENCE
EAR# 6471

CONFIGURATION LEVEL: In Work

FINISH

DRAWN M.ZHANG	DATE 11-Jul-16
ENGINEER K. ELMES	DATE 2/10/16
APPROVED S.HSIEH	DATE 11-Jul-16
CAD FILE	

TITLE
HIGH FREQ END LAUNCH
SMA JACK ASSEMBLY,
PC MOUNT, 10 MIL PIN

SCALE: 8.0:1.0 | SHEET 2 OF 2

DWG SIZE B | REV A

Amphenol RF
www.amphenolrf.com

DRAWING NO. 901-10511-1
ITEM NO. 901-10511-1
PART NO. 901-10511-1