ГК Атлант Инжиниринг – официальный представитель в РФ и СНГ
+7 (495) 109-02-08 sales@bbrc.ru www.bbrc.ru

NOTES:

1. MATERIAL AND FINISH:
   - BODIES: BeCu, WHITE BRONZE PLATING
   - CONTACT: BeCu, GOLD PLATING OVER WHITE BRONZE
   - RETAINING RING: BeCu, GOLD PLATING OVER WHITE BRONZE
   - CAP: BeCu, BeCu, WHITE BRONZE PLATING
   - FERRULE: SEAMLESS COPPER TUBING, WHITE BRONZE PLATING
   - INSULATOR : PTFE

2. ELECTRICAL:
   - A. IMPEDANCE: 50 OHM
   - B. FREQUENCY RANGE: DC - 6 GHz
   - C. VSWR(RETURN LOSS): 1.25:1 MAX.
   - D. DIELECTRIC WITHSTANDING VOLTAGE: 500 VRMS, MIN.

3. MECHANICAL:
   - A. DURABILITY: 500 CYCLES MIN.
   - B. TEMPERATURE RANGE: -65° C TO 165° C
   - C. CRIMP FERRULE WITH .128" HEX

4. PACKAGING:
   - A. QUANTITY: 100 PIECE BULK PACK
   - B. MARKING: BAG TO BE MARKED "AMPHENOL, 908-NM43300, DATE CODE, AND "NON MAGNETIC CONNECTORS""

THIRD ANGLE PROJ.

REVISIONS

REV	DESCRIPTION	DATE	ECO	APPR
A	ADD TOL AND CONSISTANT LENGTHS TO MMCX ASSEMBLIES	9/20/10	46108	KJC
B	SEE SHEET 2.	10/24/06	48260	KJC
C	SEE SHEET 2	4/8/10	48017	RR
D	7 ±.2 WAS 7.01 REF	9/20/10	48260	CPM
E	SEE SHEET 1	4/14/11	48339	JTS

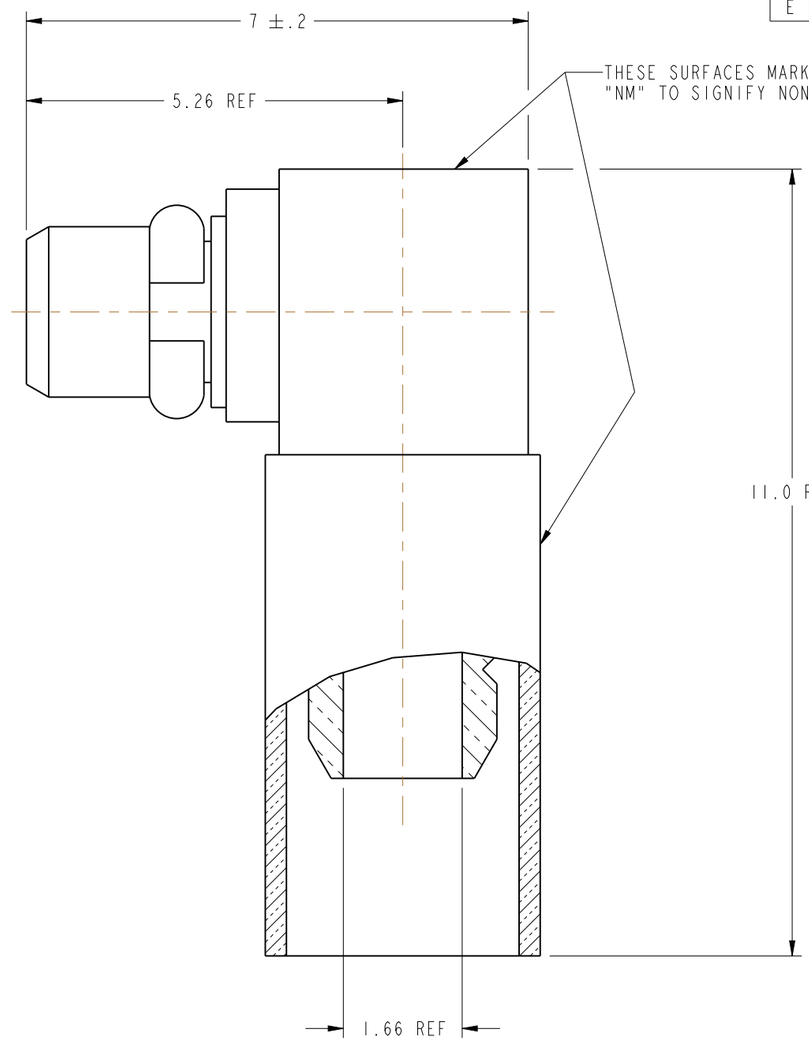

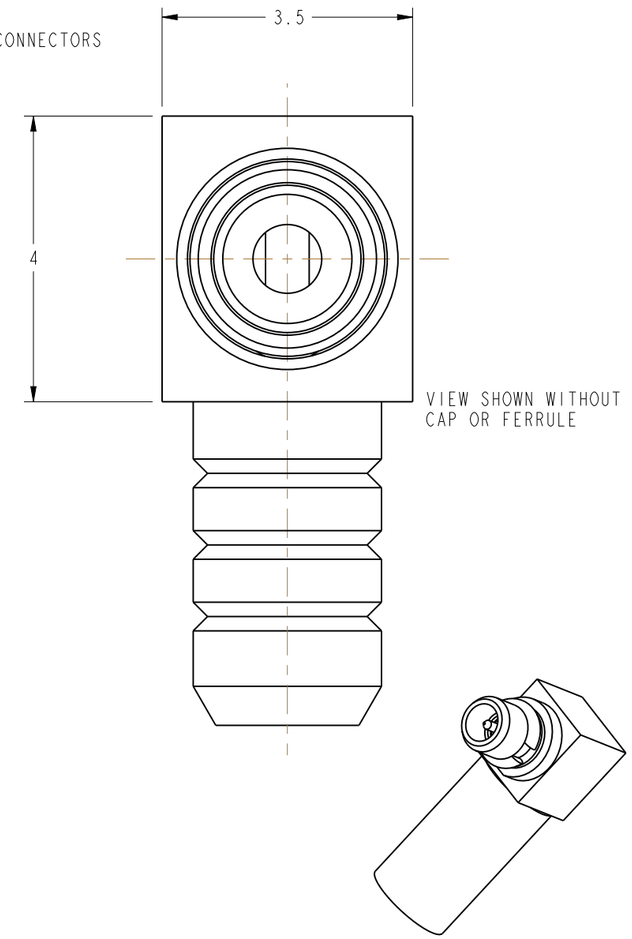

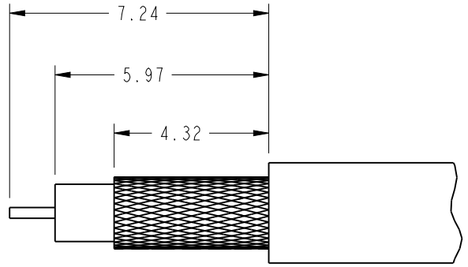

RECOMMENDED CABLE STRIPPING DIMENSIONS

CUSTOMER OUTLINE DRAWING

ALL OTHER SHEETS ARE FOR INTERNAL USE ONLY

UNLESS OTHERWISE SPECIFIED, DIMENSIONS ARE IN METRIC AND TOLERANCES ARE:

0.5 - 6mm	6 - 30mm	30 - 120mm	ANGLES
±0.1mm	±0.2mm	± 0.3mm	±1°

NOTICE - These drawings, specifications, or other data (1) are, and remain the property of Amphenol corp. (2) must be returned upon requiest; and (3) arre confidential and not to be disclosed to any person other than those to whom they are given by Amphenol Corp. the funishing of these drawings, specifications, or other data by Amphenol Corp., or to any other person to anyone for any purpose is not to be regarded by implicatioin or otherwise in any manner licensing, granting rights to permitting such holder or any other sperson to manufacture, use or sell any product, process or design, patented or otherwsie, that may in any way be related to or disclosed by said drawings, specifications, or other data.

MATERIAL
-

REFERENCE
EAR # 1952 AND 908-7007

CONFIGURATION LEVEL:

FINISH

DRAWN K. CAPOZZI	DATE 18-Jul-06	
ENGINEER K. CAPOZZI	DATE 18-Jul-06	
APPROVED B. C. GLEISSNER	DATE 9/20/10	
CAD FILE		

TITLE
ASSEMBLY MMCX
R/A PLUG TO RG-316
NON MAGNETIC

SCALE: 12.0:1.0	SHEET 2 OF 2	
DWG SIZE B	CODE ID 74868	REV E

Amphenol RF
Danbury CT USA, Tainan, Taiwan, Shenzhen, China
www.amphenolrf.com

DRAWING NO.

ITEM NO.

908-NM43300