Downloaded from Arrow.com.

REV.	DATE	ECR NO.	DESCRIPTION
NC	08/19/08	–	INITIAL RELEASE
A	12/29/08	–	REVISE BARREL, FERRULE AND STRIPPING DIMS DELETE INSULATOR, SLEEVE AND INNER FERRULE
B	01/12/09	–	REVISE FERRULE CRIMP SIZE TO .118" (NOTE 1)

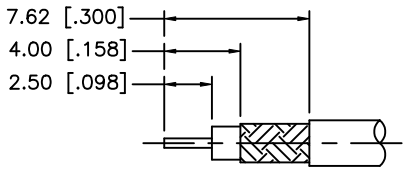

RECOMMENDED CABLE STRIPPING DIM'S

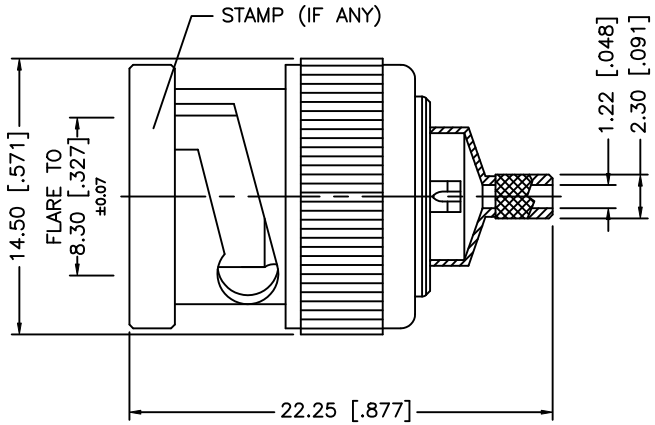

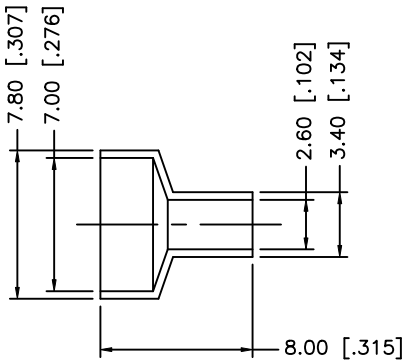

NOTE:

1. CRIMP FERRULE HEX CRIMP SIZE .118" [2.99]
2. CONTACT PIN TO SOLDER.

	DESCRIPTION	MATERIAL	FINISH	QTY
8				
7				
6				
5				
4	CONTACT PIN	BRASS	GOLD	1
3	INSULATOR	PTFE	NATURAL	1
2	BODY	BRASS	NICKEL	1
1	SHELL	BRASS	NICKEL	1

UNLESS OTHERWISE SPECIFIED DIMENSIONS ARE IN MILLIMETERS. DIMENSIONS IN [ ] ARE IN INCHES AND FOR CUSTOMER REFERANCE ONLY.

UNLESS OTHERWISE SPECIFIED TOLERANCES FOR MILLIMETERS ARE:
0.5 – 8mm ± 0.20mm
8 – 30mm ± 0.40mm
30 – 120mm ± 0.50mm

UNLESS OTHERWISE SPECIFIED TOLERANCES FOR INCHES ARE:
.020 – .315 = ± 0.007"
.315 – 1.180 = ± 0.015"
1.180 – 4.724 = ± 0.020"

DO NOT SCALE DRAWING

APPROVALS		DATE
DRAWN	GRS	01/12/09
CHECKED		
ISSUED		
SHEET	1 OF 1	
CAD FILE	C:/112/112746.DWG	

Amphenol Connex

PART DESCRIPTION: BNC CRIMP PLUG – 75ohms (FOR 1.6mm CABLE)

PART NO. 112746

DWG. NO. 112746.DWG | REV. B | SIZE A | SCALE NA