ГК Атлант Инжиниринг – официальный представитель в РФ и СНГ
+7 (495) 109-02-08 sales@bbrc.ru www.bbrc.ru

NOTES:

1. PLATING PER AMPHENOL SPEC 349-50560.
2. TIGHTEN ITEM 5 TO ITEM 2 WITH A TORQUE OF 20 IN-LBS ±1.0 IN-LB (.02373/.02147 NCM).
3. ITEM 1 SHALL BE .0000/.0021 (.0267MM ±.0267) BELOW REF. PLANE OF ITEM 2. BOTH ENDS.

5. PACKAGE THE CONNECTOR AS PER ROUTING INSTRUCTIONS.

131-7023
DRAWING NO.
THIRD ANGLE PROJ.

REVISIONS

REV	DESCRIPTION	DATE	ECO	APPR
--	RELEASE TO MFG.	1-5-77	24913	----
D	REDRAWN -NO CHANGE	2/22/82	23156	G.B.
E	ADDED LOCTITE TO CONNECTOR BODY THREADS	12/6/82	29074	----
F	A. UPDATED BOM: 1. ITEM 1 WAS 131-7504-FU, CONTACT, FEMALE; 2. DESCRIPTION FOR ITEM 3 WAS SUB-ASS'Y.; 3. DESCRIPTION FOR ITEM 4 WAS INNER CONDUCTOR; 4. DESCRIPTION FOR ITEM 5 WAS OUTER CONDUCTOR; B. ADDED NOTE 1, 4 & 5, AND UPDATED NOTES 2 & 3; C. DELETED ORIGINAL NOTES 3 & 4; D. UPDATED NOTES ON VIEW: 1. DELETED "SEE NOTES 3, 4, & 5"; 2. IN NOTE: "APPLY LOCTITE...2 PLACES", DELETED "GRADE 'C'", ADDED "242 OR ENGINEERING APPROVED EQUIVALENT"; E. DELETED ITEM 10 IN PACKAGE BOM.	8/26/08	47200	JL
G	REMOVED NOTE 4 & PACKAGE BOM	5/17/11	48576	CPM
H	SEE SHEET 2	19-Jan-17	04905	JTS

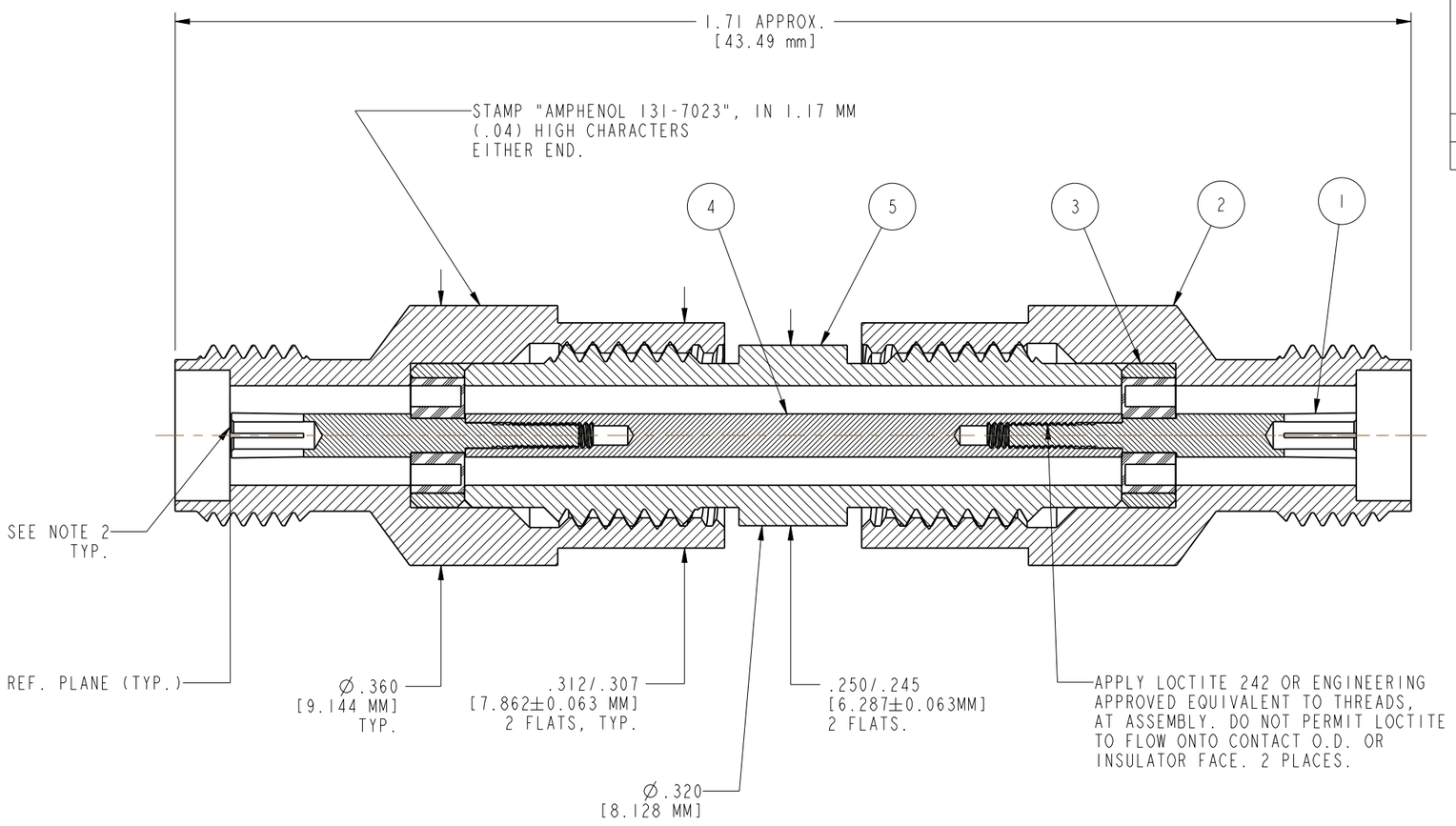

PART NUMBER	QTY.	ITEM	DESCRIPTION	FINISH
131-7535-FU	1	5	BODY	NOTE 1
131-7501-3FU	1	4	TUBE	NOTE 1
131-7507	2	3	ASSEMBLY	
131-7509-FU	2	2	BODY	NOTE 1
131-564-FU	2	1	CONTACT	NOTE 1

UNLESS OTHERWISE SPECIFIED, DIMENSIONS ARE IN INCHES AND TOLERANCES ARE:
2 PLACE DECIMAL ±.015 (0,381 mm) 3 PLACE DECIMAL ±.005 (0,127 mm) ANGLES ± 1°

NOTICE - These drawings, specifications, or other data (1) are, and remain the property of Amphenol Corp. (2) must be returned upon request; and (3) are confidential and not to be disclosed to any person other than those to whom they are given by Amphenol Corp. The furnishing of these drawings, specifications, or other data by Amphenol Corp., or to any other person to anyone for any purpose is not to be regarded by implication or otherwise in any manner licensing, granting rights or permitting such holder or any other person to manufacture, use or sell any product, process or design, patented or otherwise, that may in any way be related to or disclosed by said drawings, specifications, or other data.

MATERIAL

REFERENCE
613x-267
DOR 315423
CUSTOMER: AGILENT

DRAWN G. BOUDREAU DATE 12-17-81
ENGINEER D. CRITELLI DATE 12-21-81
APPROVED H. HUTTER DATE 2-22-82
CAD FILE 1:\APC35 \ASSY \131-7023

TITLE
ADAPTOR, 3.5 MM,
FEMALE TO FEMALE

Amphenol
Amphenol Corporation
Communication and Network
Products Division
Danbury, CT U.S.A. 06810

SCALE: 1.0:1 SHEET 1 OF 2

CODE ID	DWG SIZE	DRAWING NO.	REV
74868	B	131-7023	H