ГК Атлант Инжиниринг – официальный представитель в РФ и СНГ
+7 (495) 109-02-08 sales@bbrc.ru www.bbrc.ru

NOTES:

1. MATERIALS OF CONSTRUCTION:
   HOUSING, BODY, LOCK RING & HEX NUT = BRASS (ASTM-B16 H02, C36000), NICKEL PLATED (.000100 THICK)
   CONTACT PIN = BeCu (QQ-C-530), GOLD PLATED (.000030 THICK)
   INSULATORS (2) = PTFE PER ASTM D 1710 OR EQUIV
   LOCKWASHER = BRASS (QQ-B-613), NICKEL PLATED (.000100 THICK)

2. MAX. PANEL THICKNESS = 1.8mm [.071]

31-6055					
DRAWING NO.	REVISIONS				
THIRD ANGLE PROJ.	REV	DESCRIPTION	DATE	ECO	APPR
	A	RELEASE TO MFG.	7/26/01	43813	CPM
	B	SEE SHEET 1	2/12/03	44365	CPM
	C	SEE SHEET 1	6/11/03	44509	CPM
	D	SEE SHEET 1	4/10/06	46014	CPM
	E	PCB LAYOUT WAS CABLE STRIP; CHGE LOC OF .175 DIM	1/14/08	46897	CPM

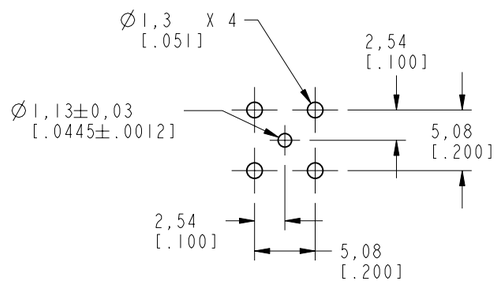

RECOMMENDED PCB LAYOUT
SCALE 2.000

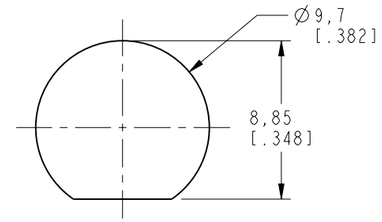

RECOMMENDED MOUNTING HOLE DIMENSIONS
SCALE 3.000

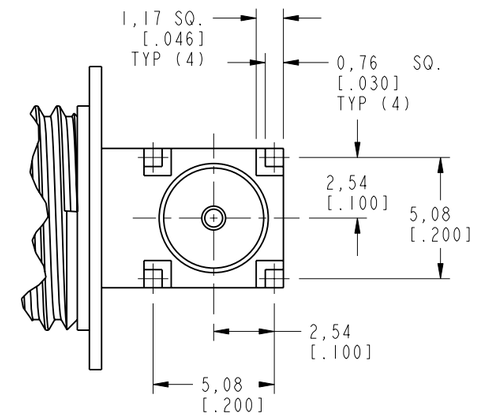

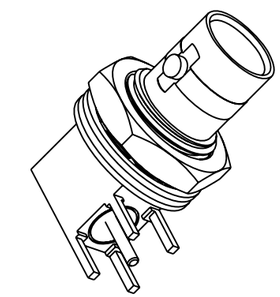

SCALE 2.000

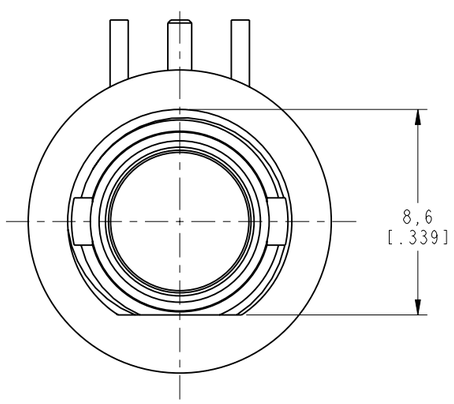

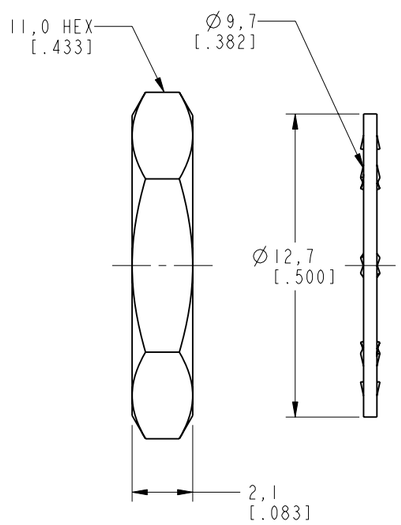

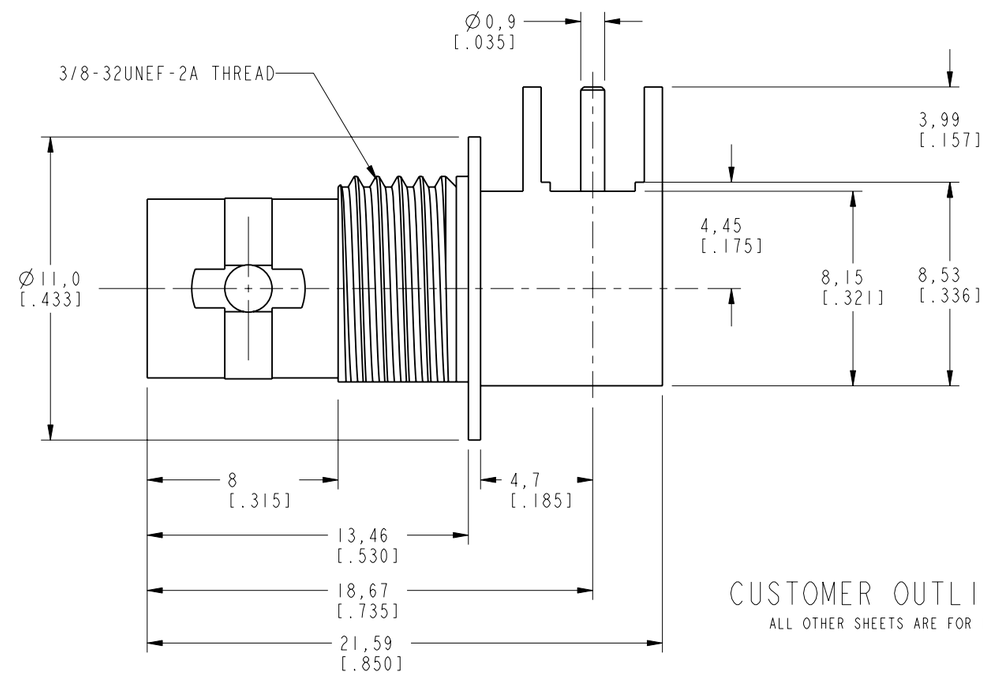

CUSTOMER OUTLINE DRAWING
ALL OTHER SHEETS ARE FOR INTERNAL USE ONLY

UNLESS OTHERWISE SPECIFIED, DIMENSIONS ARE IN MM (INCHES) AND TOLERANCES ARE:

0.5 - 6mm	6 - 30mm	30 - 120mm
±0.2mm	±0.4mm	± 0.6mm

NOTICE - These drawings, specifications, or other data (1) are, and remain the property of Amphenol Corp. (2) must be returned upon request; and (3) are confidential and not to be disclosed to any person other than those to whom they are given by Amphenol Corp. The furnishing of these drawings, specifications, or other data by Amphenol Corp., or to any other person to anyone for any purpose is not to be regarded by implication or otherwise in any manner licensing, granting rights or permitting such holder or any other person to manufacture, use or sell any product, process or design, patented or otherwise, that may in any way be related to or disclosed by said drawings, specifications, or other data.

MATERIAL

REFERENCE
EAR 343
GNE# 31-6055_ASSY

DRAWN: C. McGRATH	DATE: 23-Jul-01	
ENGINEER: O. BARTHELMES	DATE: 23-Jul-01	
APPROVED: O. BARTHELMES	DATE: 7/26/01	
CAD FILE: I:\MINI_BNC\31-6055		

TITLE
MINI BNC R/A
PCB MOUNT JACK

Amphenol
Amphenol Corporation
Communication and Network
Products Division
Danbury, CT U.S.A. 06810

SCALE: 4.0:1 | SHEET 2 OF 2

CODE ID	DWG SIZE	DRAWING NO.	REV
74868	B	31-6055	E