ПК Атлант Инжиниринг – официальный представитель в РФ и СНГ
+7 (495) 109-02-08 sales@bbrc.ru www.bbrc.ru

REVISIONS			
ISS	ZONE	DESCRIPTION\PER REQUEST\DATE	
C	D–6	FKLC20500B WAS FKLC20500A,FKRR00103A WAS FKRR00101A,ø3.55±0.05 WAS ø3.4 MIN. \RD–DM06033101B\31–Mar–06	
D	E–3	ø0.6$^{+0.1}_{-0.05}$ WAS ø0.6\RD–DM07090601E\09–11–07'	
E	A–1	NO.9 WAS CHANGED\RD–DM07101501E\18–Oct–07	
F	E–1	REMOVED CRIMPING INFORMATION ADDED INSULATOR DIMENSION	ECO: 46924

REMARK 1: 1. MUST WITHSTAND 4 LBS. MIN. PUSHOUT FORCE FROM NO.1 AFTER STAKING OPERATION
2. REMARK 1 IS MAINTAINED BY STAMPING THE FOUR POINTS SHOWN ON THE DRAWING WITHOUT PUNCTURING NO.1
(1. 打四點後零件 2 由零件 1 推出至少必須承受 4 磅推力)
(2. 打四點後除需符合備註 1 要求外且不可擊穿零件 1)

1. SEE 349–50713 FOR DETAILED CABLE ASSEMBLY INSTRUCTIONS

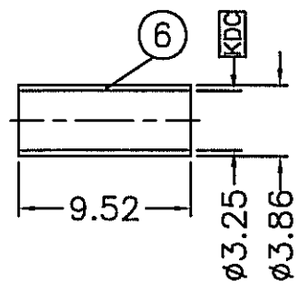

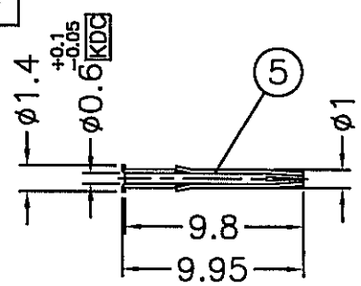

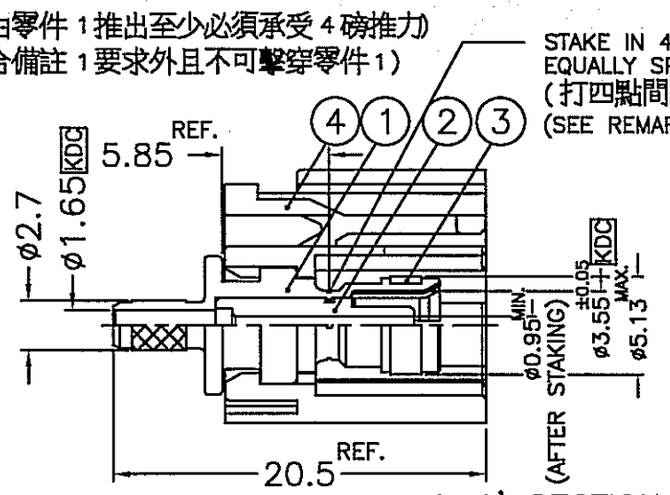

A–A' SECTION
(A–A' 剖面)

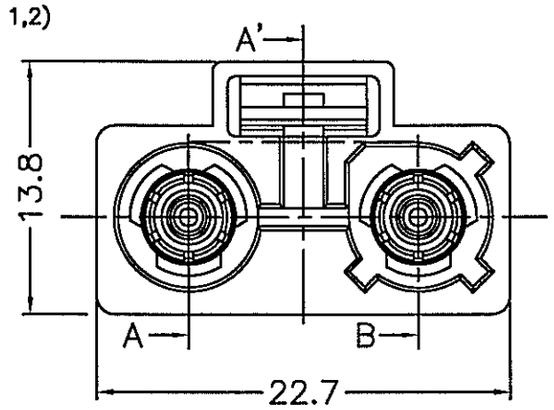

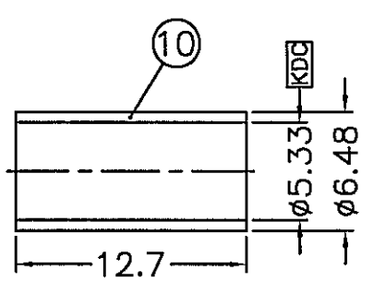

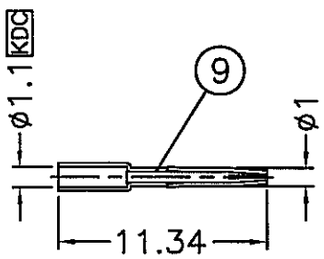

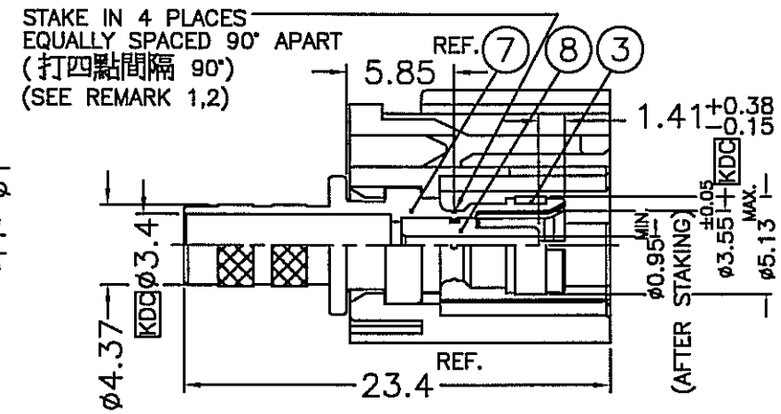

A–B' SECTION
(A–B' 剖面)

TABLE

KEY CODING	PART NO.	DRAWING NO.	ITEM NO.	LOCK COVER
A	2FA2–NASJ–C00–0	FKT6121AW–019–NT30G–50	FK7121AFAA2NC5F	FKLC20501B
B	2FA2–NBSJ–C00–0	FKT6121BW–019–NT30G–50	FK7121AFBA2NC5F	FKLC20502B
C	2FA2–NCSJ–C00–0	FKT6121CW–019–NT30G–50	FK7121AFCA2NC5F	FKLC20503B
D	2FA2–NDSJ–C00–0	FKT6121DW–019–NT30G–50	FK7121AFDA2NC5F	FKLC20504B
E	2FA2–NESJ–C00–0	FKT6121EW–019–NT30G–50	FK7121AFEA2NC5F	FKLC20505B
F	2FA2–NFSJ–C00–0	FKT6121FW–019–NT30G–50	FK7121AFFA2NC5F	FKLC20506B
G	2FA2–NGSJ–C00–0	FKT6121GW–019–NT30G–50	FK7121AFGA2NC5F	FKLC20507B
H	2FA2–NHSJ–C00–0	FKT6121HW–019–NT30G–50	FK7121AFHA2NC5F	FKLC20508B
I	2FA2–NISJ–C00–0	FKT6121IW–019–NT30G–50	FK7121AFIA2NC5F	FKLC20509B
K	2FA2–NKSJ–C00–0	FKT6121KW–019–NT30G–50	FK7121AFKA2NC5F	FKLC20510B
Z	2FA2–NZSJ–C00–0	FKT6121ZW–019–NT30G–50	FK7121AFZA2NC5F	FKLC20511B
L	2FA2–NLSJ–C00–0	FKT6121LW–019–NT30G–50	FK7121AFLA2NC5F	FKLC20512B
M	2FA2–NMSJ–C00–0	FKT6121MW–019–NT30G–50	FK7121AFMA2NC5F	FKLC20513B
N	2FA2–NNSJ–C00–0	FKT6121NW–019–NT30G–50	FK7121AFNA2NC5F	FKLC20514B

NOTES: FINISH (PLATING THICKNESS IN MICRO–INCHES)
1. ZINC DIECAST PER JIS H5301 ZDC2 OR EQUIVALENT
2. PHOSPHOR BRONZE PER QQ–B–750
3. NICKEL PL. 60 MIN. THICK OVER COPPER STRIKE
4. GOLD PL. 30 MIN. THICK OVER NICKEL PL. 100 MIN. THICK OVER COPPER STRIKE
5. TEFLON MIL–P–19468 ; ASTM D–1710 OR EQUIVALENT
6. COPPER PER ASTM B–75 ALLOY C12200 OR EQUIVALENT
7. NYLOY66(WITH 30% GLASS FIBER) PER GINAR TECHNOLOGY CO., LTD. GRADE A0520FN–03 OR EQUIVALENT
8. NICKEL PL. 60 MIN. THICK OVER COPPER PL. 300 MIN. THICK
9. BERYLLIUM COPPER JIS C1720R–1/4H OR EQUIVALENT

CONFIGURATION CONTROL:
NO CHANGES PERMITTED TO DRAWING WITHOUT PPAP QUALIFIED CUSTOMER APPROVAL

NO.	DESCRIPTION	MATERIAL	FINISH	Q'TY	DRAWING NO.
10	FERRULE	NOTE 6	NOTE 3	1	FKFR00201A
9	CONTACT PIN	NOTE 2	NOTE 4	1	FKCP02501
8	INSULATOR	NOTE 5	NATURAL	1	FKNS03802A
7	BODY	NOTE 1	NOTE 8	1	FKBD04701B
6	FERRULE	NOTE 6	NOTE 3	1	FKFR00101A
5	CONTACT PIN	NOTE 2	NOTE 4	1	FKCP01801A
4	LOCK COVER	NOTE 7		1	SEE TABLE
3	RETAINER RING	NOTE 9	NATURAL	2	FKRR00103A
2	INSULATOR	NOTE 5	NATURAL	1	FKNS03902A
1	BODY	NOTE 1	NOTE 8	1	FKBD03001B

DIMENSIONS ARE IN MILLIMETERS

UNLESS OTHERWISE SPECIFIED TOLERANCES
0.5–6 = ±0.2
6–30 = ±0.4
30–120 = ±0.6
120–315 = ±1
315–1000 = ±1.6
1000–2000 = ±2.4

PART NO. 2FA2–NXSJ–C00–0

APPROVED	SCOTT	DATE 31–Mar–05
CHECKED	SCOTT	DATE 31–Mar–05
DRAWN	CISSY	DATE 31–Mar–05

SCALE 2/1 | ISSUE F | FILE NO. F:\DWG\FKT\6121XX\019\50\NT30G–FSZ

Amphenol
Danbury,CT,USA–Tainan,Taiwan–Shenzhen,China

TITLE
FAKRA TWIN SMB CRIMP JACK

DRAWING NO.
FKT6121XX–019–NT30G–50

ITEM NO. FK7121AFXA2NC5F