ГК Атлант Инжиниринг - официальный представитель в РФ и СНГ
+7 (495) 109-02-08 sales@bbrc.ru www.bbrc.ru

DO NOT SCALE THIS DRAWING

DRAWING NUMBER
26850-RFX

REVISIONS

SYM	DESCRIPTION	DATE	E.C.O. NO.	APPR.
A	OFFICIAL ENG. RELEASE TO MFG.	10/2/91	38063	DR

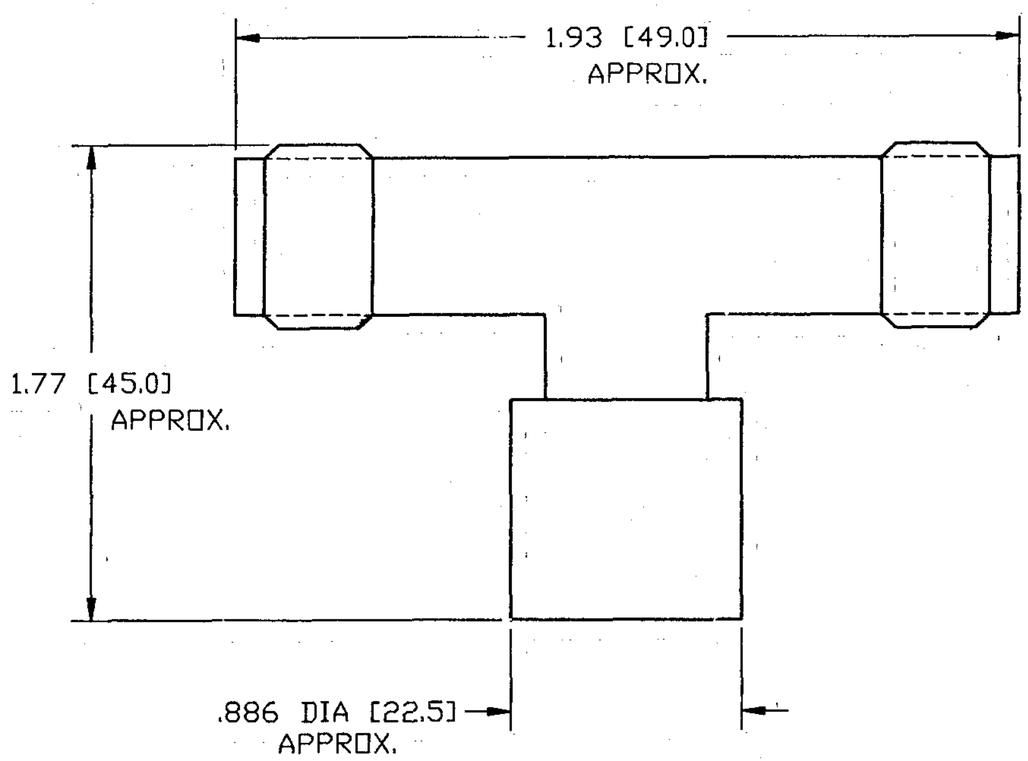

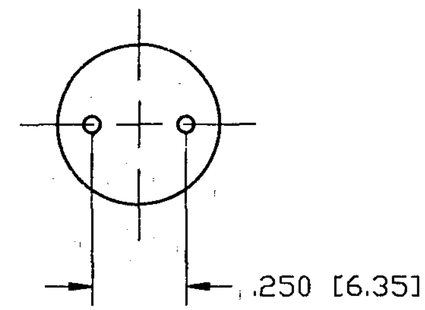

NOTES:

1. BRASS BODY, NICKEL PLATED.
2. PBT POLYESTER INSULATOR.
3. PHOSPHOR BRONZE CONTACT, GOLD PLATED .000003
4. PACKAGE IN BAG #999-331.

PART NO.	QUAN	UOM	ITEM LINE NO	DESCRIPTION	CODE	FINISH

LIST OF MATERIAL

H:\DEPT611\TWINAX\000\ASSY\26850RFX

REMOVE ALL BURRS, BREAK CORNERS AND SHARP EDGES .005 MAXIMUM UNLESS OTHERWISE SPECIFIED.

NOTICE — These drawings, specifications, or other data (1) are, and remain the property of Amphenol Corp. (2) must be returned upon request; and (3) are confidential and are not to be disclosed to any person other than those to whom they are given by Amphenol Corp. The furnishing of these drawings, specifications, or other data by Amphenol Corp., or by any other person to anyone for any purpose is not to be regarded by implication or otherwise as in any manner licensing, granting rights or permitting such holder or any other person to manufacture, use or sell any product, process or design, patented or otherwise, that may in any way be related to or disclosed by said drawings, specifications or other data.

NEXT ASSY	USED ON

MATERIAL

SPECIFICATION

FINISH

UNLESS OTHERWISE SPECIFIED DIMENSIONS ARE IN INCHES. TOLERANCES NOT OTHERWISE SPECIFIED ARE:

2 PLACE DECIMAL	3 PLACE DECIMAL	ANGLES
±.015 (0.381 mm)	±.005 (0.127 mm)	± 1°

REFERENCE DRAWING NO
EAR 962370-0

		DATE
DRAWN BY	TERRI ALBERA	5-1-91
CHECKED		9-13-91
ENGINEER		9-13-91
QUALITY ASSURANCE		9/17/91
MFG ENG.	H. FREDLUND	9/18/91

TITLE
TWINAX TEE ADAPTOR
JACK - PLUG - JACK

Amphenol Corporation
RF/Microwave Operations
Danbury, Conn. U.S.A.

SCALE NTS | SHEET | OF

CODE IDENTIFICATION	DRAWING SIZE	DRAWING NO	ISSUE
74868	B	26850-RFX	A

Design Products Co. Inc. Clearprint #1020