ROHS COMPLIANT

PRODUCT DATA DRAWING

REVISION HISTORY			
REV	DESCRIPTION	DATE	APPROVED
A	DCN 41797	10/15	DAL

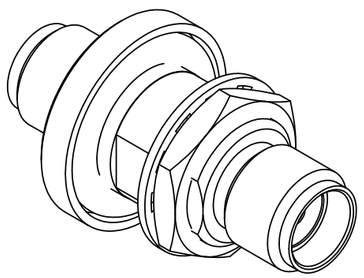

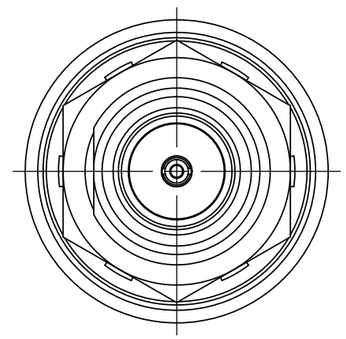

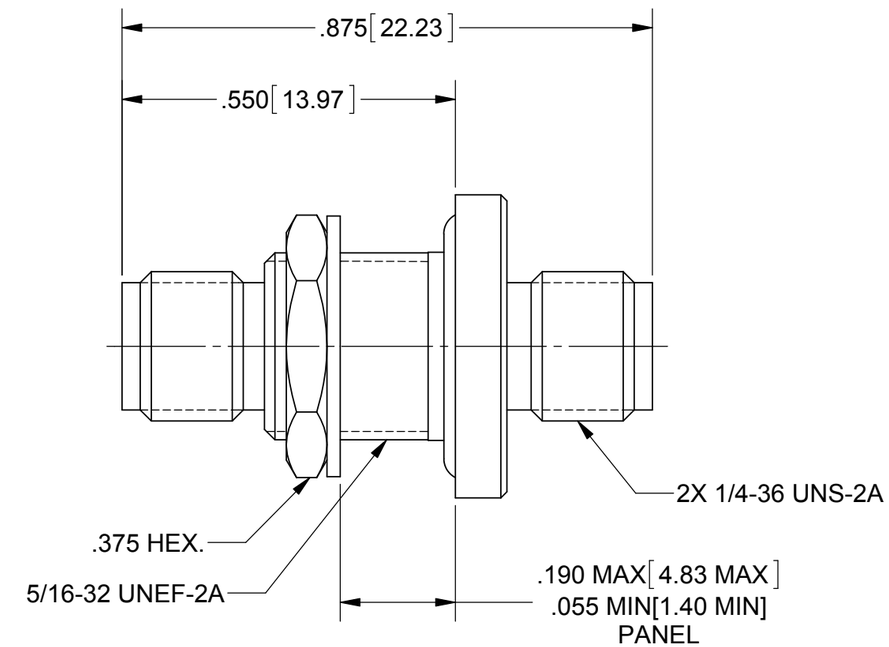

MATERIAL:

BODY & HEX NUT:	STAINLESS STEEL PER AMS-5640, ALLOY UNS S30300, TYPE 1
CONTACTS:	BERYLLIUM COPPER PER ASTM B196, ALLOY No. UNS C17300, TD04
INSULATORS:	PTFE PER ASTM D1710, TYPE I, GRADE 1, CLASS B
O-RING:	SILICONE RUBBER PER A-A-59588, CLASS 2B, GRADE 50/60
LOCKWASHER:	300 SERIES STAINLESS STEEL
GLASS:	EN1 OR EQUIVALENT
PIN:	KOVAR

FINISH:

BODY, HEX NUT & WASHER:	PASSIVATED PER AMS-2700
CONTACTS:	GOLD PER ASTM B488, TYPE II, CODE C, CLASS 0.76, OVER NICKEL PER AMS-QQ-N-290, CLASS 1, .00005" MIN.
PIN:	NICKEL PER AMS-QQ-N-290, CLASS 1

PERFORMANCE:

IMPEDANCE:	50 OHMS
FREQ. RANGE:	DC TO 18.0 GHz

RECOMMENDED MOUNTING HOLE

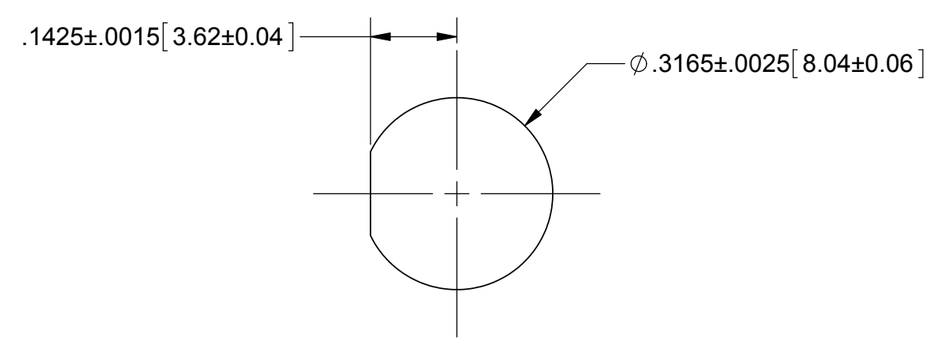

MATERIAL:	SEE NOTES
FINISH:	SEE NOTES
SURFACE AREA:	N/A

PROPRIETARY

THE INFORMATION CONTAINED IN THIS DRAWING IS THE SOLE PROPERTY OF SV MICROWAVE, INC. ANY REPRODUCTION IN PART OR AS A WHOLE WITHOUT THE WRITTEN PERMISSION OF SV MICROWAVE, INC IS PROHIBITED.

DIMENSIONS ARE IN INCHES TOLERANCES:

FRACTIONAL: ±1/64 ANGULAR: X° ±1°0' X°X' ±15'

DECIMAL: .X ±.030 .XX ±.010 .XXX ±.005

INTERPRET DIMENSIONS AND TOLERANCES PER ASME Y14.5M - 1994

THIRD ANGLE PROJECTION

UNLESS OTHERWISE SPECIFIED

1) ALL DIMENSIONS ARE IN INCHES [MILLIMETERS]
2) ALL DIMENSIONS ARE AFTER PLATING.
3) BREAK CORNERS & EDGES .005 R. MAX.
4) CHAM. 1ST & LAST THREADS.
5) SURFACE ROUGHNESS 63₊MIL-STD-10.
6) DIA.'S ON COMMON CENTERS TO BE CONCENTRIC WITHIN .005 T.I.R.
7) REMOVE ALL BURRS

DRAWN:	BNK 10/29/15	
CHECKED:	DAL 10/29/15	
APPROVED:	DGG 02/26/79	

SV Microwave, Inc.
2400 Centrepark West Drive, Suite 100
West Palm Beach, FL 33409

TITLE: SMA JACK TO JACK BULKHEAD ADAPTER HERMETIC SEAL

SIZE	CAGE CODE	DWG. NO.
B	95077	SF2991-6002

SCALE: 4:1 SHEET 1 OF 1

Downloaded from Arrow.com.