ГК Атлант Инжиниринг – официальный представитель в РФ и СНГ
+7 (495) 109-02-08 sales@bbrc.ru www.bbrc.ru

NOTES:
1. MATERIALS AND FINISHES:
   BODY - BRASS, NICKEL PLATING
   CONTACT - PHOSPHOR BRONZE, GOLD PLATING
   LEGS - BRASS, GOLD PLATING
   INSULATORS - PTFE
2. ELECTRICAL:
   A. IMPEDANCE: 50 OHM
   B. FREQUENCY RANGE: DC - 11 GHz
   C. VSWR(RETURN LOSS): 1.2 @ 1 GHz
   D. DIELECTRIC WITHSTANDING VOLTAGE: 1500 VRMS, MIN.
3. MECHANICAL:
   A. TEMPERATURE RANGE: -40° C TO +85° C
4. PACKAGING:
   A. QUANTITY: SINGLE PACK
   B. MARKING: BAG TO BE MARKED
      "AMPHENOL, 31-5607, AND DATE CODE"

THIRD ANGLE PROJ.

REVISIONS

REV	DESCRIPTION	DATE	ECO	APPR
A	RELEASE TO MFG	9/25/92	39032	JM
F	REDESIGN & REDRAWN	5/6/11	48446	CPM

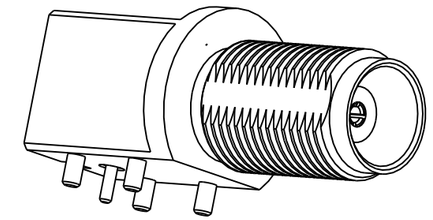

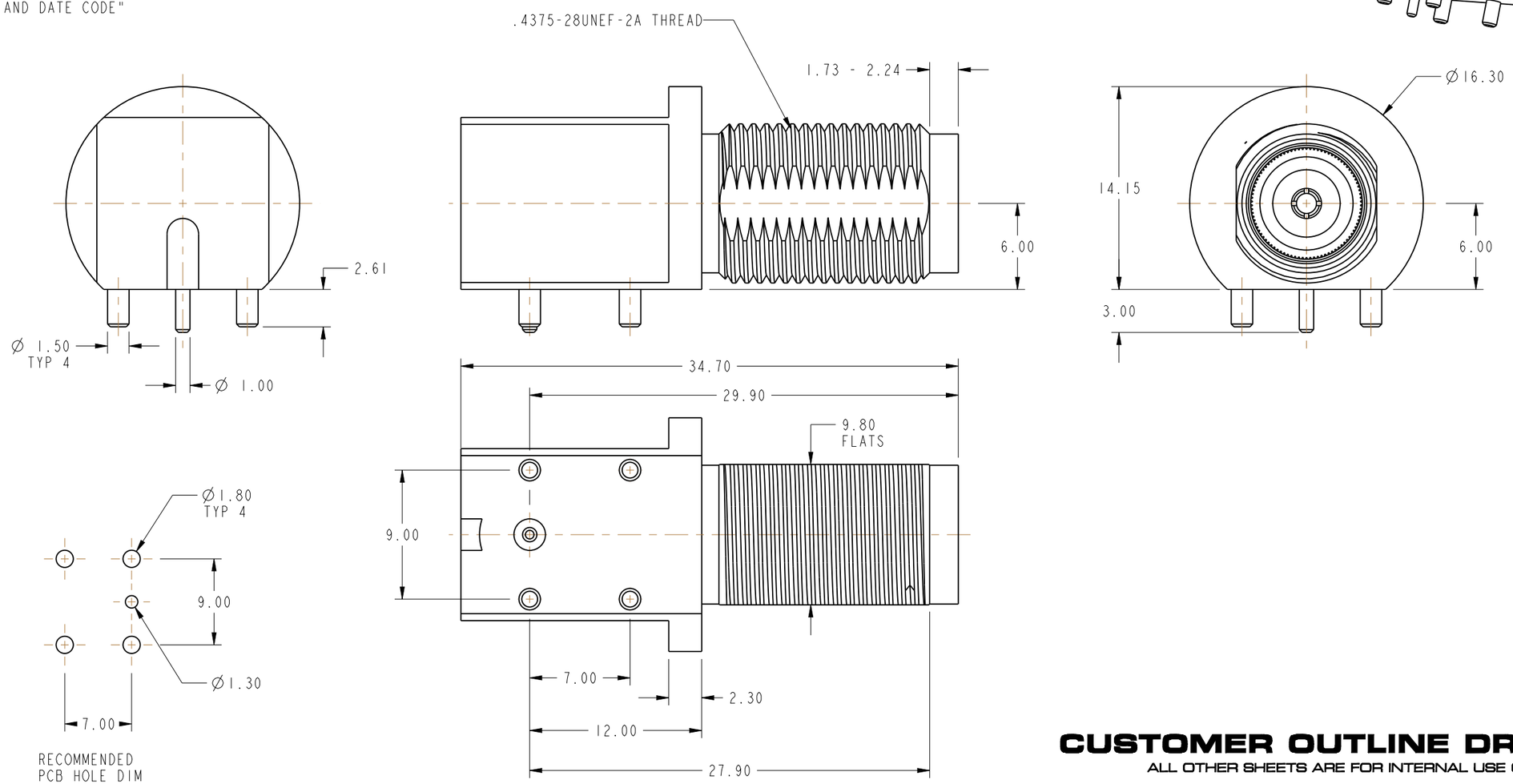

CUSTOMER OUTLINE DRAWING

ALL OTHER SHEETS ARE FOR INTERNAL USE ONLY

UNLESS OTHERWISE SPECIFIED, DIMENSIONS ARE IN METRIC AND TOLERANCES ARE:

0.5 - 6mm	6 - 30mm	30 - 120mm	ANGLES
±0.1mm	±0.2mm	± 0.3mm	±1°

NOTICE - These drawings, specifications, or other data (1) are, and remain the property of Amphenol corp. (2) must be returned upon requiest; and (3) arre confidential and not to be disclosed to any person other than those to whom they are given by Amphenol Corp. the funishing of these drawings, specifications, or other data by Amphenol Corp., or to any other person to anyone for any purpose is not to be regarded by implicatioin or otherwise in any manner licensing, granting rights to permitting such holder or any other sperson to manufacture, use or sell any product, process or design, patented or otherwsie, that may in any way be related to or disclosed by said drawings, specifications, or other data.

MATERIAL: SEE NOTES

REFERENCE: EAR 962778-2

CONFIGURATION LEVEL:

FINISH

DRAWN C. McGRATH	DATE 19-Nov-10	
ENGINEER K. CAPOZZI	DATE 19-Nov-10	
APPROVED K. CAPOZZI	DATE 5/4/11	
CAD FILE		

TITLE
TNC R/A PCB
RECEPTACLE

SCALE: 2.0:1.0	SHEET 2 OF 2	
DWG SIZE B	CODE ID 74868	REV F

Amphenol RF
Danbury CT USA, Tainan, Taiwan, Shenzhen, China
www.amphenolrf.com

DRAWING NO. 31-5607
ITEM NO. 31-5607
PART NO. 31-5607