REV.	ECN.NO.	MODIFY.CONTENT	DATE
B	ES.D0706.113	add date code	06/26/2007
C	ES.D0707.046	change material of shell	07/13/2007
D	ES.D0807.053	change specification	07/11/2008
E	ES.D0906.089	add halogen free spec	06/24/2009
F	ES.D0907.080	ADD TRACE KEEP OUT AREA	7/14/2009
G	ES.D0911.002	Cancel MMC PIN's definiens	11/2/2009

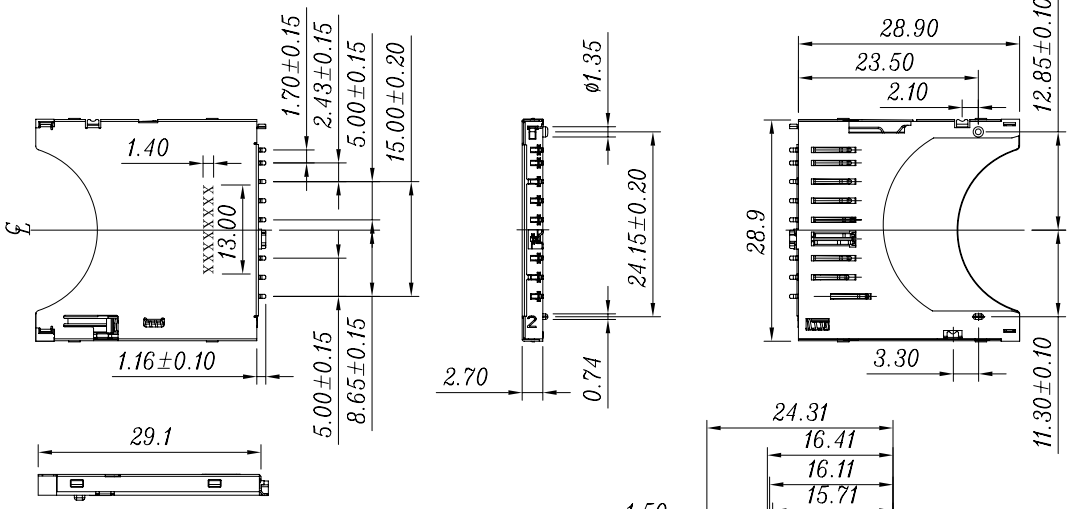

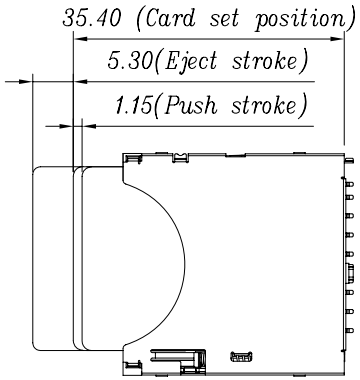

View of inserted card

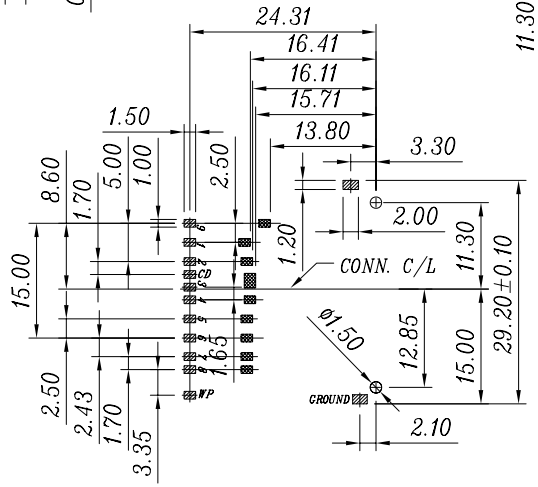

RECOMMENDED PCB LAYOUT

DEFAULT TOLERANCE: ±0.05

▨ : RECOMMENDED SOLDER PAD AREA

■ : TRACE KEEP OUT AREA

SPECIFICATION

1. Material:

Insulator: LCP, rated UL94V-0, color: black.
Contacts: Phosphor Bronze,
Tin 160u" at Solder Tail,
Selectived Gold on Contact Area Plating.
Ground: Brass, Tin 160u".
Shell: Phosphor Bronze.

2. Electrical Characteristics:

Operating voltage : 250V(AC/DC).
Current rating : 0.5 A.
Operating Temperature: -40°C~+85°C.
Insulation resistance: 1000M ohms min. at 250VDC
Dielectric withstanding voltage: 500 VAC/1minute.
Contact resistance: 100m ohms max.
Mating cycle: 10000 cycles, spring is not breaking.

THE PART NUMBER:

10100 *** ** * *

313: RoHS
851: halogen free

64 — contact area: 1u"Gold over 50u" Nickel, SMT area: 160u"Tin over 50u" Nickel
65 — contact area: 3u"Gold over 50u" Nickel, SMT area: 160u"Tin over 50u" Nickel
66 — contact area: 5u"Gold over 50u" Nickel, SMT area: 160u"Tin over 50u" Nickel
67 — contact area: 10u"Gold over 50u" Nickel, SMT area: 160u"Tin over 50u" Nickel
68 — contact area: 15u"Gold over 50u" Nickel, SMT area: 160u"Tin over 50u" Nickel
69 — contact area: 30u"Gold over 50u" Nickel, SMT area: 160u"Tin over 50u" Nickel

default: Tray
1: Tube
2: Reel

defaul: without D/C
#: with D/C

DATE CODE:

Line: A1, A2..... B1, B2.....Assembly line
Date: See table
Month: See table
Year: See table

Code Table:

Date	1	2	3	4	5	6	7	8	9	10	11	12	.....	27	28	29	30	31
Code	01	02	03	04	05	06	07	08	09	10	11	12	.....	27	28	29	30	31
Month	1	2	3	4	5	6	7	8	9	10	11	12						
Code	01	02	03	04	05	06	07	08	09	10	11	12						
Year	05	06	07	08	09	10	11	12	13	14	15							
Code	05	06	07	08	09	10	11	12	13	14	15							

Pin No.		SD
P1	SD-DAT3	1P
P2	SD-CMD	2P
P3	SD-VSS1	3P
P4	SD-VDD	4P
P5	SD-CLK	5P
P6	SD-VSS2	6P
P7	SD-DAT0	7P
P8	SD-DAT1	8P
P9	SD-DAT2	9P

CIRCUIT:

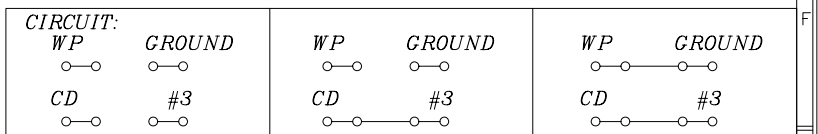

GENERAL	TOLERANCE	FILE.NO.	10100313	PART.NO.	SEE PART NUMBER	DRAWN	Iris.He	MATERIAL		SCALE	1:1
X.±0.50	x.°± 5°	REV.	G	TITLE	SD PUSH PUSH CONNECTOR(H=2.7mm)-1	CHECKED		DATE	2009/11/2	UNIT	mm
.X±0.38	.x°± 2°	SIZE									
.XX±0.25	.xx± 1°	A4		SHEET	1/1	APPROVED		Amphenol Shouhmin Industry			

Downloaded from Arrow.com.