DRW NO.	SH	REV
C-923-600J-500	1	H

ZONE	REV	ECN NUMBER	DESCRIPTION	BY	DATE	APPROVED
SHT1, B8	F	DCOY-AB4NPZ.VER01	UPDATED PART MARKING REQUIREMENTS	HCL-DC	06/22/2016	D.COVEY
	G	BWAG-AG948F.VER01	REMOVED THIN WALL NEAR AUTOMATION FEATURE FOR OPEN, RIGHT POLARIZING, RIGHT WALL MODULES	HCL-DC	12/09/2016	B.WANG
	H	JNII-19082203	ADDED PLATING OPTIONS "R" & "U" IN P/N TREE	HCL-SD	09/05/2019	J.NI

NOTE: ONLY THREE MOST RECENT RELEASED REVISIONS DISPLAYED.

9 2 3 - 6 X 0 J - X X X

- 9 2 3 — XCede HD BACKPLANE MODULE MALE STANDARD LOAD
- 6 — 6 PAIR
- X — LETTER
- 0 J — 4-POSITION
- X — NUMBER
- X X — LETTER

LETTER									
LEFT POLARIZING GUIDANCE (SEE SHEET 3)	J (NO KEY)	A	B	C	D	E	F	G	H
RIGHT POLARIZING GUIDANCE (SEE SHEET 4)	Y (NO KEY)	P	Q	R	S	T	U	V	W
OPEN (SEE SHEET 2)	0 (ZERO)								
LEFT WALL (SEE SHEET 5)	L								
RIGHT WALL (SEE SHEET 6)	M								
TWO WALL (SEE SHEET 7)	1								

NUMBER	PIN STYLE, HEIGHT
0	GUIDE PIN MACHINED, 28.5mm / OPEN MODULE

NUMBER	SIGNAL & LG. GROUND WIPE LENGTH, COMPLIANT PIN SIZE
1	2 mm WIPE SIGNAL, 4 mm WIPE LG GND, Ø.0217" DRILL
2	3 mm WIPE SIGNAL, 4 mm WIPE LG GND, Ø.0217" DRILL
3	2 mm WIPE SIGNAL, 4 mm WIPE LG GND, Ø.0177" DRILL
4	3 mm WIPE SIGNAL, 4 mm WIPE LG GND, Ø.0177" DRILL
5	2 mm WIPE SIGNAL, 3 mm WIPE LG GND, Ø.0217" DRILL
6	3 mm WIPE SIGNAL, 3 mm WIPE LG GND, Ø.0217" DRILL
7	2 mm WIPE SIGNAL, 3 mm WIPE LG GND, Ø.0177" DRILL
8	3 mm WIPE SIGNAL, 3 mm WIPE LG GND, Ø.0177" DRILL
C	2 mm WIPE SIGNAL, 2 mm WIPE LG GND, Ø.0217" DRILL
D	2 mm WIPE SIGNAL, 2 mm WIPE LG GND, Ø.0177" DRILL

LETTER	PLATING
B	NI SULFAMATE, STANDARD GOLD, LEADED
C	NI SULFAMATE, HIGH GOLD, LEADED
D	NI SULFAMATE, STANDARD GOLD, LEADFREE
E	NI SULFAMATE, HIGH GOLD, LEADFREE
F	NANO NI, STANDARD GOLD, LEADED
G	NANO NI, HIGH GOLD, LEADED
H	NANO NI, STANDARD GOLD, LEADFREE
J	NANO NI, HIGH GOLD, LEADFREE
R	NANO NI BILAYER, STANDARD GOLD, LEADFREE
U	NANO NI BILAYER, HIGH GOLD, LEADFREE

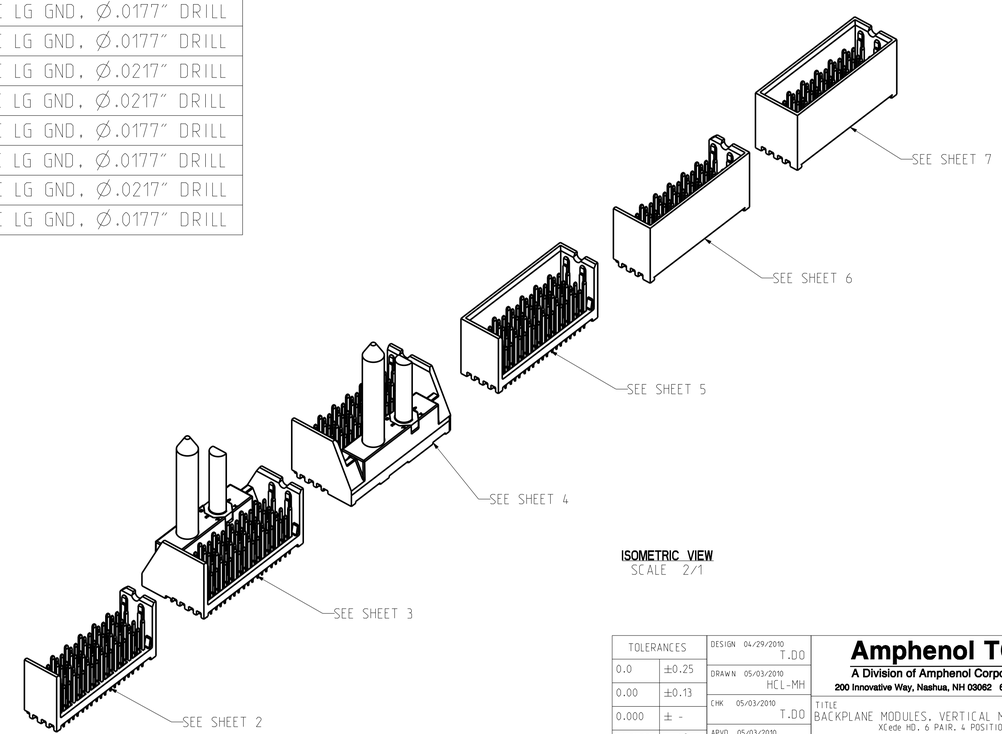

ISOMETRIC VIEW
SCALE 2/1

NOTES:

1. REFER TO TB-2235 FOR XCede HD PRODUCT SPECIFICATIONS.
2. NOTCH DESIGNATES "ROW A" SIDE OF SHROUD. NOTCH FEATURE ON OPPOSITE SIDE FROM PART MARKING.
3. SEE TB-2325 FOR PART MARKING REQUIREMENTS.
4. PLATING THICKNESS OF SIGNAL CONTACT AND GROUND CONTACT IS DETERMINED BY PLATING CODE. SEE PART NUMBER TREE SHEET 1.
5. REPAIR PROCEDURE FOR MODULE. SEE TB-2245.
6. SEE TB-2237 FOR ROUTING GUIDELINES & PTH REQ'S.
7. SEE DOC C190-0009-000 FOR TOOLING KEEPOUT ZONES.
8. BACKPLANE DATUM REFERENCE.
9. DIMENSIONS APPLY FOR BOTH COMPLIANT PIN SIZES.
10. OPTIONAL HOLE/MOUNTING SCREW LOCATION FOR GROUNDED PIN OR ADDITIONAL GUIDE PIN SUPPORT. SEE DRAWING C-914-4010-000 FOR OPTIONAL HOLE DETAILS. ONLY APPLIES FOR MACHINED GUIDE PIN APPLICATIONS.

TOLERANCES	
0.0	±0.25
0.00	±0.13
0.000	± -
ANGLES	± 3°

UNLESS OTHERWISE SPECIFIED DIMENSIONS ARE IN MM. DECIMAL MARKER IS A PERIOD

INTERPRET PER ASME Y14.5M

CODE IDENT 31413

CUSTOMER USE DRAWING

DESIGN 04/29/2010 T.DO
DRAWN 05/03/2010 HCL-MH
CHK 05/03/2010 T.DO
APVD 05/03/2010 T.DO

Amphenol TCS
A Division of Amphenol Corporation
200 Innovative Way, Nashua, NH 03062 603.879.3000

TITLE BACKPLANE MODULES, VERTICAL MALE HEADER
XCede HD, 6 PAIR, 4 POSITION

PART NO. SEE PN TREE SHEET 1 — REV N/A
DRAWING NO. C-923-600J-500 — REV H
ASSEM :C923-600J-500 DRAWING :C923-600J-500 — 1.1 B.10
SIZE D | SCALE 1/1 | SHEET 1 OF 8

Downloaded from Arrow.com.

DRW NO.	SH	REV
C-923-600J-500	2	H

ZONE	REV	ECN NUMBER	DESCRIPTION	BY	DATE	APPROVED
			SEE SHEET 1			

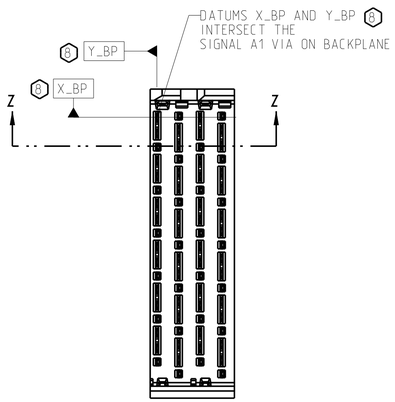

OPEN BACKPLANE MODULE DIMENSION

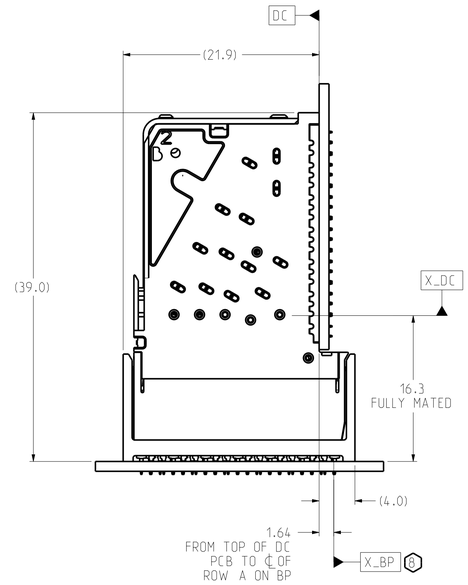

CONNECTOR REFERENCE
SCALE 3/1

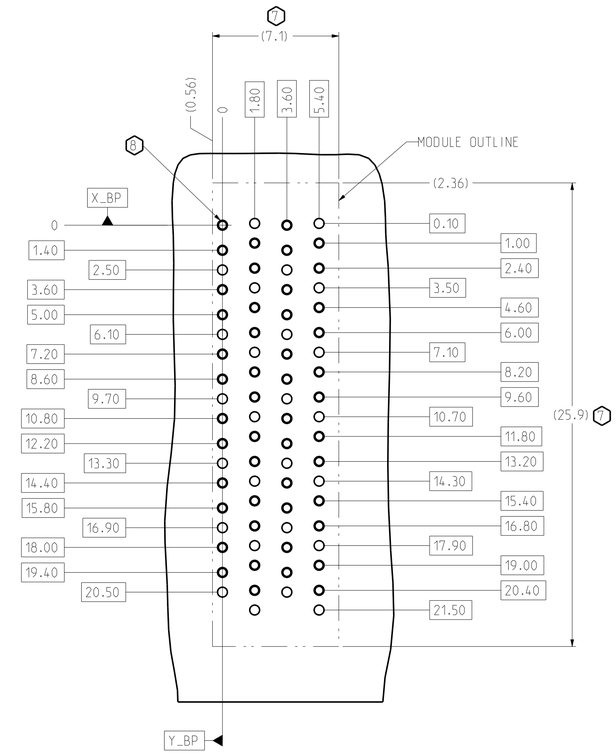

BP HOLE PATTERN
COMPONENT SIDE
SCALE 6/1

OPEN BACKPLANE FOOTPRINT

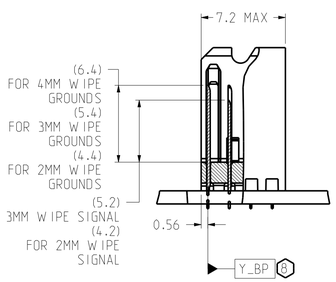

SECTION Z-Z

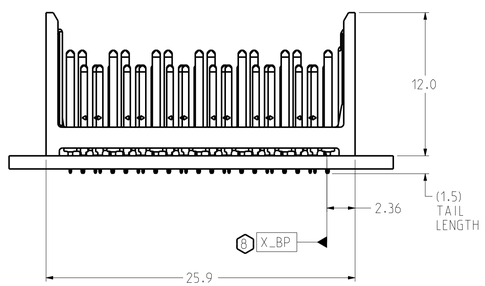

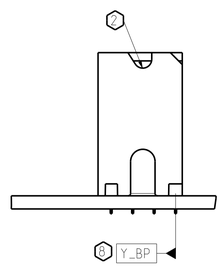

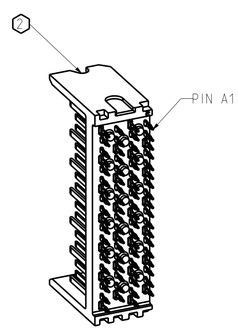

ISOMETRIC VIEW
SCALE 3/1

TOLERANCES	
0.0	±0.25
0.00	±0.13
0.000	± -
ANGLES	± 3°

UNLESS OTHERWISE SPECIFIED DIMENSIONS ARE IN MM. DECIMAL MARKER IS A PERIOD

INTERPRET PER ASME Y14.5M

CODE IDENT 31413

CUSTOMER USE DRAWING

DESIGN 04/29/2010	T.DO
DRAWN 05/03/2010	HCL-MH
CHK 05/03/2010	T.DO
APVD 05/03/2010	T.DO

Amphenol TCS
A Division of Amphenol Corporation
200 Innovative Way, Nashua, NH 03062 603.879.3000

TITLE
BACKPLANE MODULES, VERTICAL MALE HEADER
XCede HD, 6 PAIR, 4 POSITION

PART NO.	REV
SEE PN TREE SHEET 1	N/A
DRAWING NO. C-923-600J-500	REV H
ASSEM :C923-600J-500 DRAWING :C923-600J-500	1.1 B.10

SIZE D | SCALE 1/1 | SHEET 2 OF 8

Downloaded from Arrow.com.

DRW NO.	SH	REV
C-923-600J-500	3	H

ZONE	REV	ECN NUMBER	DESCRIPTION	BY	DATE	APPROVED
			SEE SHEET 1			

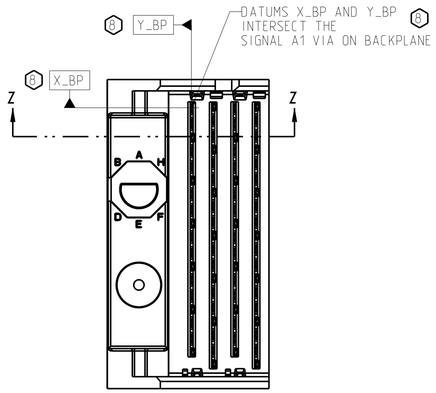

LEFT POLARIZING/GUIDE
BACKPLANE MODULE DIMENSION

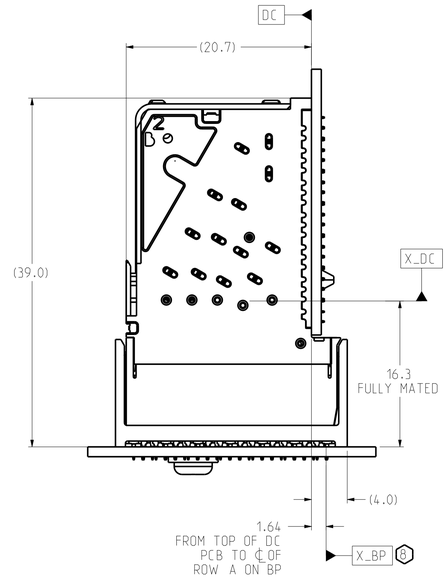

CONNECTOR REFERENCE
SCALE 3/1

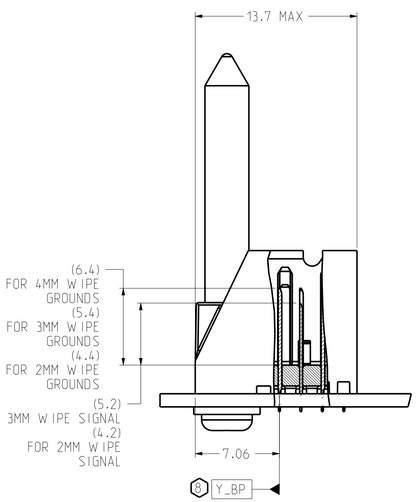

SECTION Z-Z

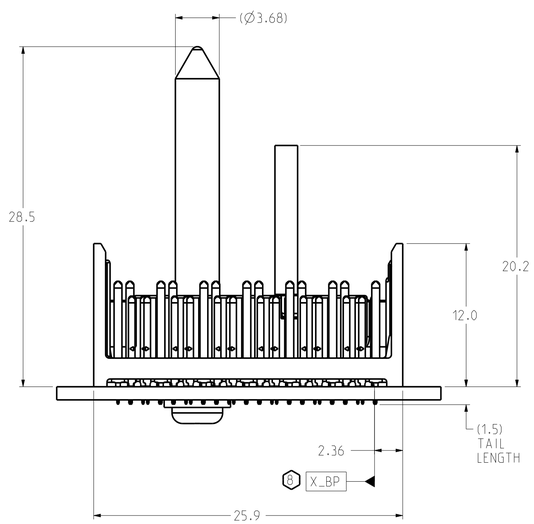

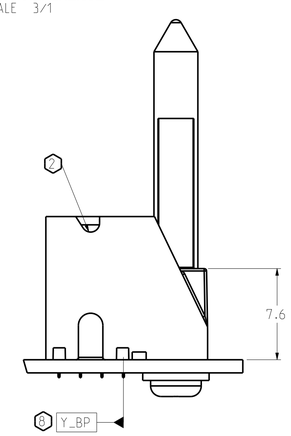

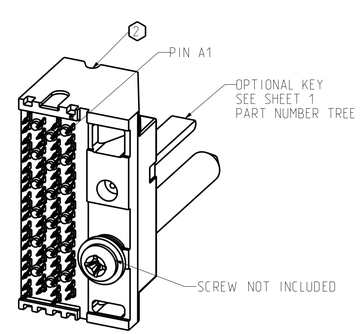

ISOMETRIC VIEW
SCALE 3/1

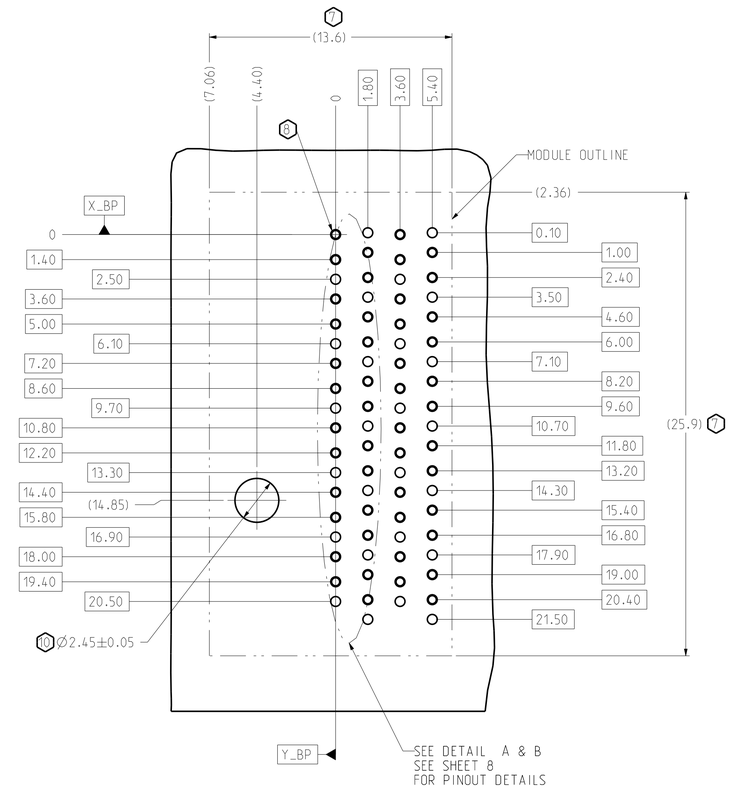

BP HOLE PATTERN
COMPONENT SIDE
SCALE 6/1

LEFT POLARIZING/GUIDE
BACKPLANE FOOTPRINT

TOLERANCES	
0.0	±0.25
0.00	±0.13
0.000	± -
ANGLES	± 3°

UNLESS OTHERWISE SPECIFIED DIMENSIONS ARE IN MM. DECIMAL MARKER IS A PERIOD

DESIGN 04/29/2010 T.DO
DRAWN 05/03/2010 HCL-MH
CHK 05/03/2010 T.DO
APVD 05/03/2010 T.DO

Amphenol TCS
A Division of Amphenol Corporation
200 Innovative Way, Nashua, NH 03062 603.879.3000

TITLE
BACKPLANE MODULES, VERTICAL MALE HEADER
XCede HD, 6 PAIR, 4 POSITION

PART NO. SEE PN TREE SHEET 1 — REV N/A
DRAWING NO. C-923-600J-500 — REV H

ASSEM :C923-600J-500 — 1.1
DRAWING :C923-600J-500 — B.10

INTERPRET PER ASME Y14.5M

CUSTOMER USE DRAWING

CODE IDENT 31413

SIZE D | SCALE 1/1 | SHEET 3 OF 8

Downloaded from Arrow.com.

DRW NO.	SH	REV
C-923-600J-500	4	H

ZONE	REV	ECN NUMBER	DESCRIPTION	BY	DATE	APPROVED
			SEE SHEET 1			

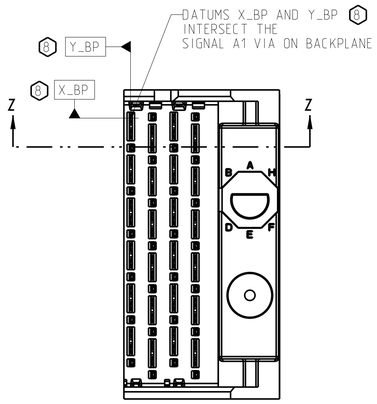

RIGHT POLARIZING/GUIDE
BACKPLANE MODULE DIMENSION

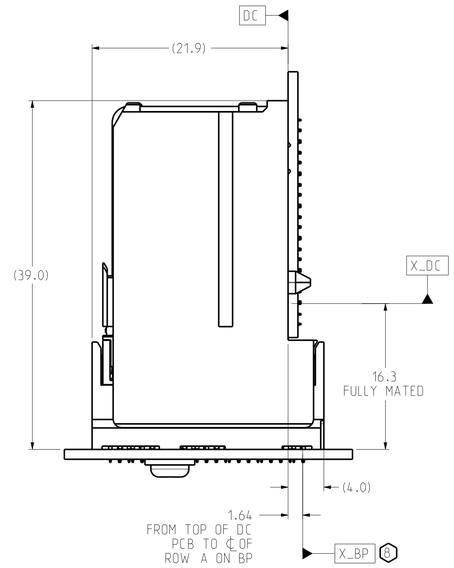

CONNECTOR REFERENCE
SCALE 3/1

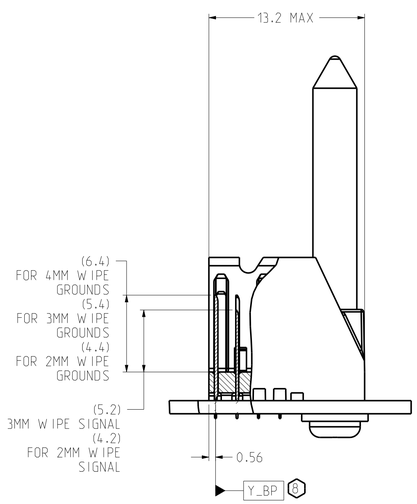

SECTION Z-Z

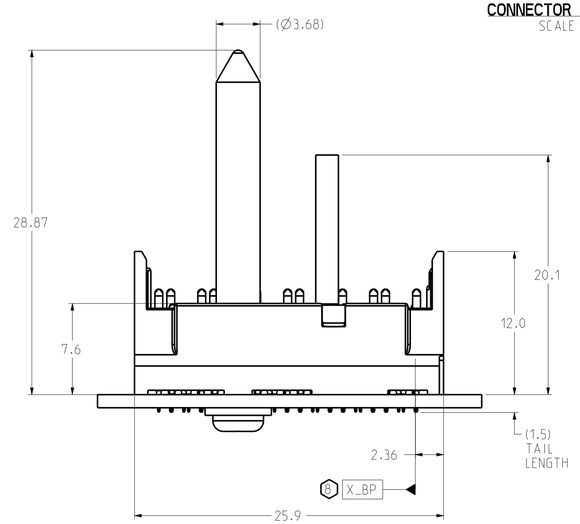

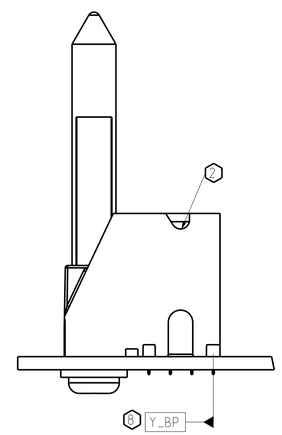

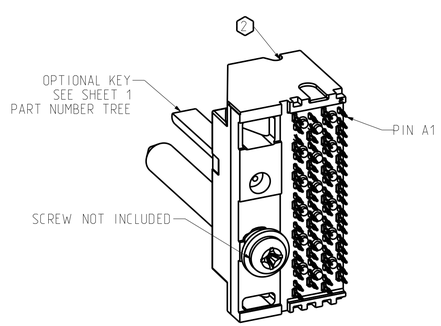

ISOMETRIC VIEW
SCALE 3/1

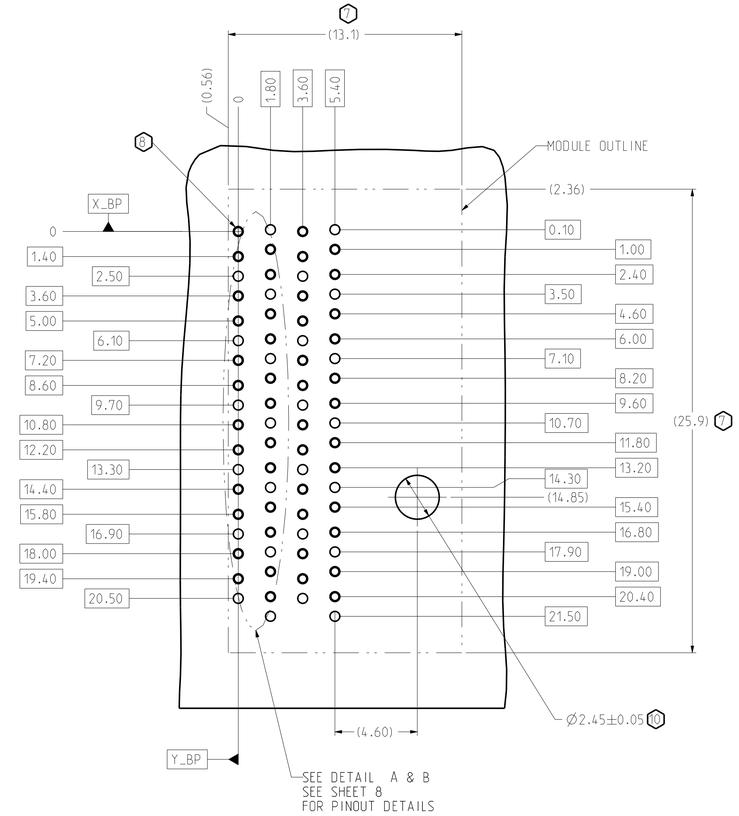

BP HOLE PATTERN
COMPONENT SIDE
SCALE 6/1

RIGHT POLARIZING/GUIDE
BACKPLANE FOOTPRINT

TOLERANCES	
0.0	±0.25
0.00	±0.13
0.000	± -
ANGLES	± 3°

UNLESS OTHERWISE SPECIFIED DIMENSIONS ARE IN MM. DECIMAL MARKER IS A PERIOD

INTERPRET PER ASME Y14.5M

CODE IDENT 31413

CUSTOMER USE DRAWING

DESIGN 04/29/2010	T.DO
DRAWN 05/03/2010	HCL-MH
CHK 05/03/2010	T.DO
APVD 05/03/2010	T.DO

Amphenol TCS
A Division of Amphenol Corporation
200 Innovative Way, Nashua, NH 03062 603.879.3000

TITLE
BACKPLANE MODULES, VERTICAL MALE HEADER
XCede HD, 6 PAIR, 4 POSITION

PART NO.	REV
SEE PN TREE SHEET 1	N/A
DRAWING NO. C-923-600J-500	REV H
ASSEM :C923-600J-500 / DRAWING :C923-600J-500	1.1 / B.10

SIZE D | SCALE 1/1 | SHEET 4 OF 8

Downloaded from Arrow.com.

DRW NO.	SH	REV
C-923-600J-500	5	H

ZONE	REV	ECN NUMBER	DESCRIPTION	BY	DATE	APPROVED
			SEE SHEET 1			

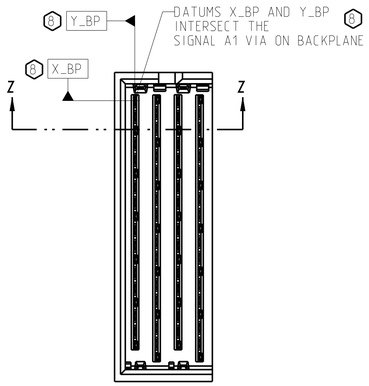

LEFT WALL BACKPLANE MODULE DIMENSION

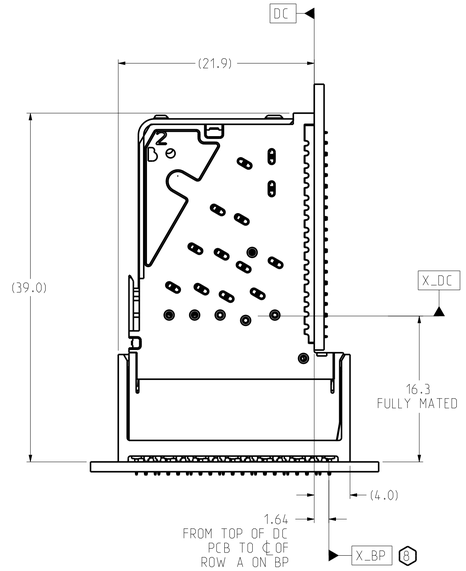

CONNECTOR REFERENCE
SCALE 3/1

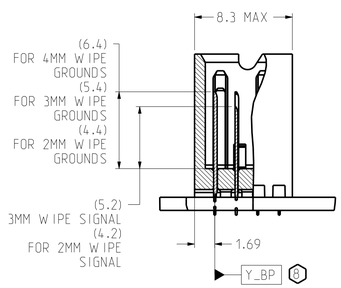

SECTION Z-Z

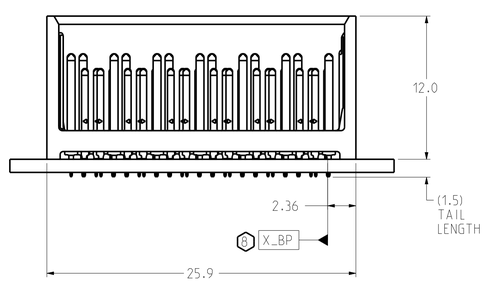

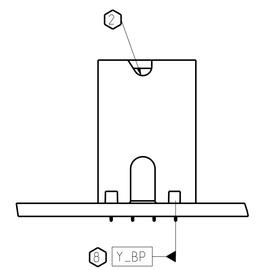

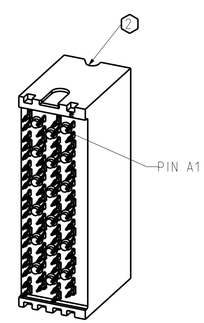

ISOMETRIC VIEW
SCALE 3/1

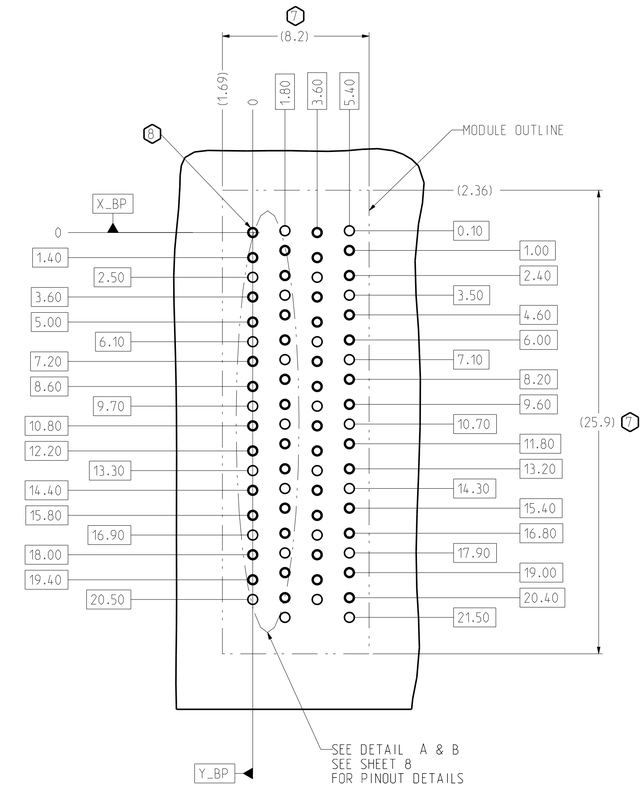

BP HOLE PATTERN
COMPONENT SIDE
SCALE 6/1

LEFT WALL BACKPLANE FOOTPRINT

TOLERANCES	
0.0	±0.25
0.00	±0.13
0.000	± -
ANGLES	± 3°

UNLESS OTHERWISE SPECIFIED DIMENSIONS ARE IN MM. DECIMAL MARKER IS A PERIOD

INTERPRET PER ASME Y14.5M

CODE IDENT 31413

CUSTOMER USE DRAWING

DESIGN 04/29/2010	T.DO
DRAWN 05/03/2010	HCL-MH
CHK 05/03/2010	T.DO
APVD 05/03/2010	T.DO

Amphenol TCS
A Division of Amphenol Corporation
200 Innovative Way, Nashua, NH 03062 603.879.3000

TITLE
BACKPLANE MODULES, VERTICAL MALE HEADER
XCede HD, 6 PAIR, 4 POSITION

PART NO.	REV
SEE PN TREE SHEET 1	N/A
DRAWING NO. C-923-600J-500	H

ASSEM :C923-600J-500
DRAWING :C923-600J-500
1.1
B.10

SIZE D | SCALE 1/1 | SHEET 5 OF 8

Downloaded from Arrow.com.

DRW NO.	SH	REV
C-923-600J-500	6	H

ZONE	REV	ECN NUMBER	DESCRIPTION	BY	DATE	APPROVED
			SEE SHEET 1			

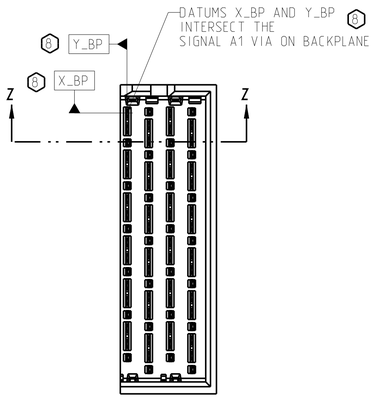

RIGHT WALL BACKPLANE MODULE DIMENSION

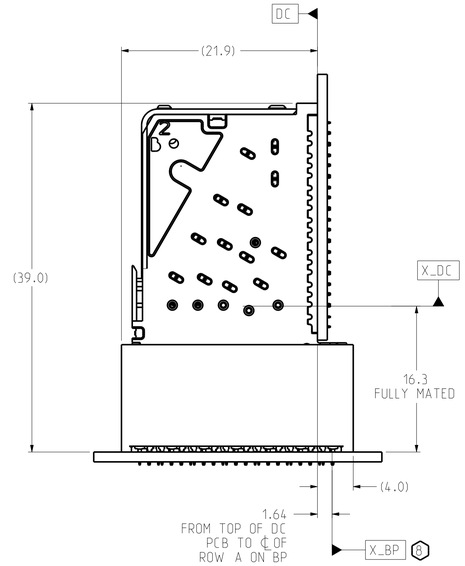

CONNECTOR REFERENCE
SCALE 3/1

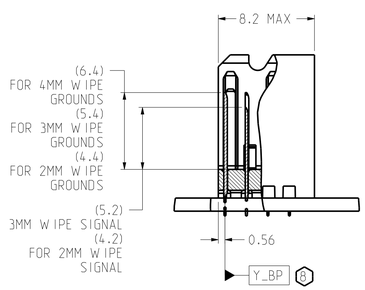

SECTION Z-Z

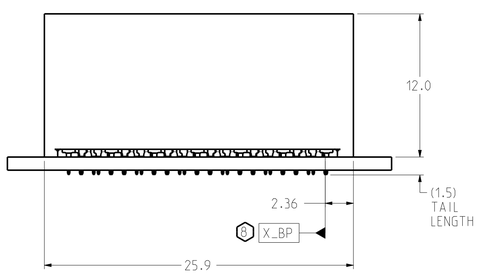

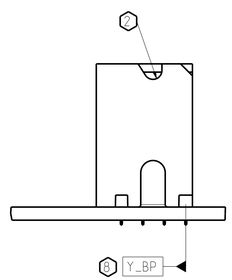

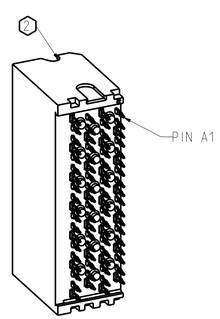

ISOMETRIC VIEW
SCALE 3/1

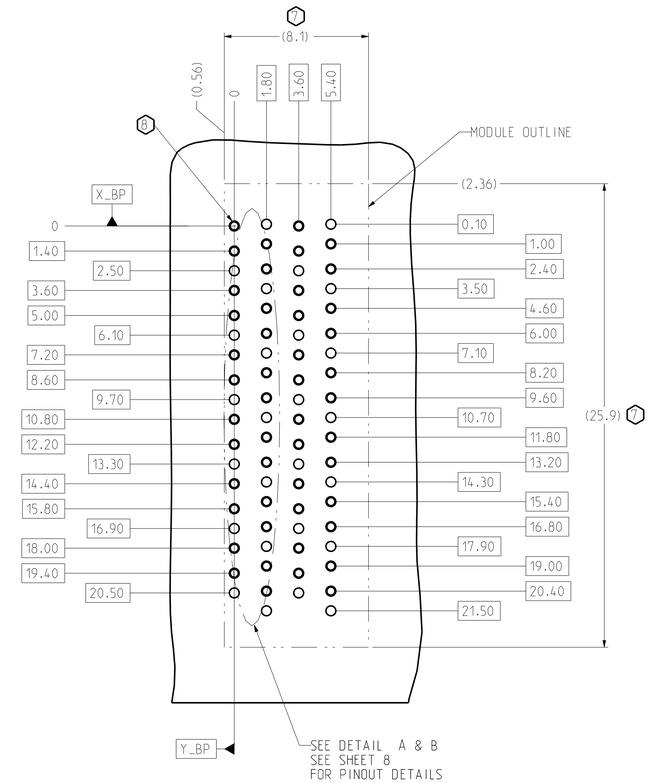

BP HOLE PATTERN
COMPONENT SIDE
SCALE 6/1

RIGHT WALL BACKPLANE FOOTPRINT

TOLERANCES	
0.0	±0.25
0.00	±0.13
0.000	± -
ANGLES	± 3°

UNLESS OTHERWISE SPECIFIED DIMENSIONS ARE IN MM. DECIMAL MARKER IS A PERIOD

DESIGN 04/29/2010 T.DO
DRAWN 05/03/2010 HCL-MH
CHK 05/03/2010 T.DO
APVD 05/03/2010 T.DO

Amphenol TCS
A Division of Amphenol Corporation
200 Innovative Way, Nashua, NH 03062 603.879.3000

TITLE
BACKPLANE MODULES, VERTICAL MALE HEADER
XCede HD, 6 PAIR, 4 POSITION

PART NO. SEE PN TREE SHEET 1 — REV N/A
DRAWING NO. C-923-600J-500 — REV H
ASSEM :C923-600J-500 DRAWING :C923-600J-500 — 1.1 B.10

INTERPRET PER ASME Y14.5M
CODE IDENT 31413
CUSTOMER USE DRAWING
SIZE D | SCALE 1/1 | SHEET 6 OF 8

Downloaded from Arrow.com.

DRW NO.	SH	REV
C-923-600J-500	7	H

ZONE	REV	ECN NUMBER	DESCRIPTION	BY	DATE	APPROVED
			SEE SHEET 1			

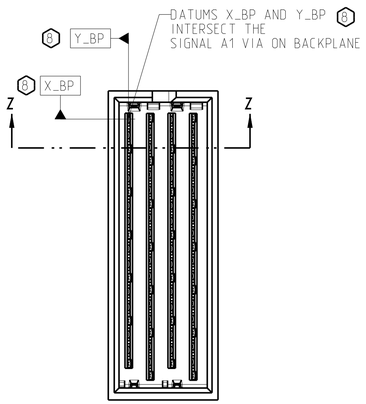

TWO WALL BACKPLANE MODULE DIMENSION

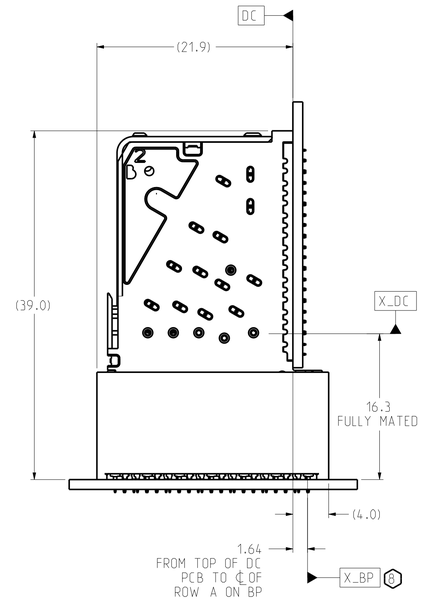

CONNECTOR REFERENCE
SCALE 3/1

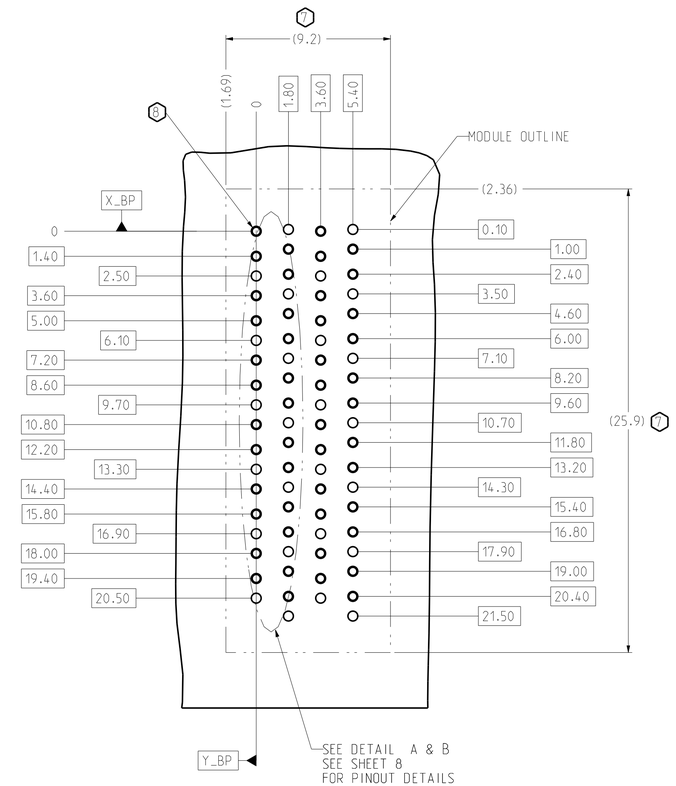

BP HOLE PATTERN
COMPONENT SIDE
SCALE 6/1

TWO WALL BACKPLANE FOOTPRINT

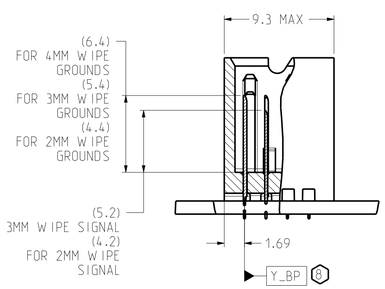

SECTION Z-Z

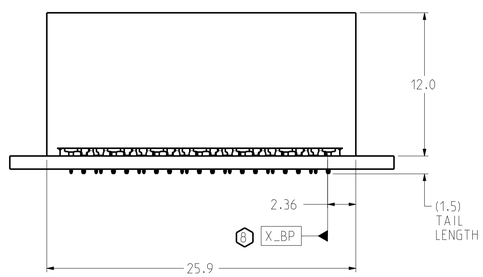

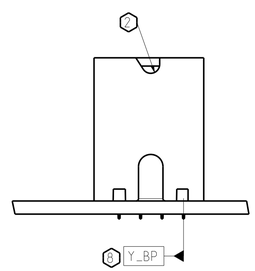

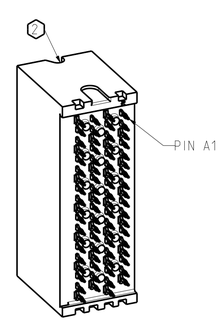

ISOMETRIC VIEW
SCALE 3/1

TOLERANCES	
0.0	±0.25
0.00	±0.13
0.000	± -
ANGLES	± 3°

UNLESS OTHERWISE SPECIFIED DIMENSIONS ARE IN MM. DECIMAL MARKER IS A PERIOD

INTERPRET PER ASME Y14.5M

CODE IDENT 31413

CUSTOMER USE DRAWING

DESIGN 04/29/2010	T.DO	
DRAWN 05/03/2010	HCL-MH	
CHK 05/03/2010	T.DO	
APVD 05/03/2010	T.DO	

Amphenol TCS
A Division of Amphenol Corporation
200 Innovative Way, Nashua, NH 03062 603.879.3000

TITLE
BACKPLANE MODULES. VERTICAL MALE HEADER
XCede HD. 6 PAIR. 4 POSITION

PART NO.	REV
SEE PN TREE SHEET 1	N/A
DRAWING NO. C-923-600J-500	H
ASSEM :C923-600J-500 / DRAWING :C923-600J-500	1.1 / B.10

SIZE D | SCALE 1/1 | SHEET 7 OF 8

Downloaded from Arrow.com.

DRW NO.	SH	REV
C-923-600J-500	8	H

ZONE	REV	ECN NUMBER	DESCRIPTION	BY	DATE	APPROVED
			SEE SHEET 1			

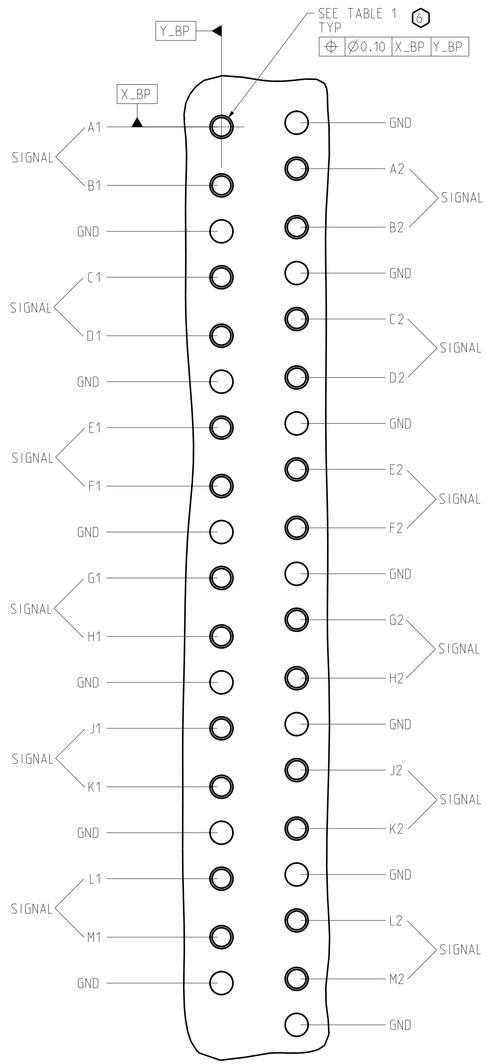

DETAIL A
HSD PINOUTS
SCALE 14/1

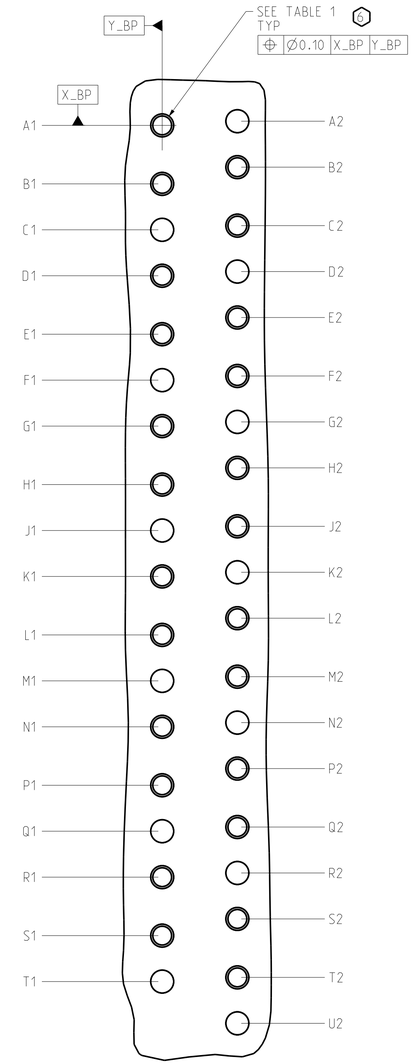

DETAIL B
LC PINOUTS
SCALE 14/1

TABLE 1 (B)

	COMPLIANT PIN DRILL Ø.0217"	COMPLIANT PIN DRILL Ø.0177"
PTH	Ø0.45±0.05	Ø0.36±0.05
DRILL	Ø0.55 [.0217"]	Ø0.45 [.0177"]
PAD	Ø0.85	Ø0.75

TOLERANCES	
0.0	±0.25
0.00	±0.13
0.000	± -
ANGLES	± 3°

UNLESS OTHERWISE SPECIFIED DIMENSIONS ARE IN MM. DECIMAL MARKER IS A PERIOD

INTERPRET PER ASME Y14.5M

CODE IDENT 31413

CUSTOMER USE DRAWING

DESIGN 04/29/2010 T.DO
DRAWN 05/03/2010 HCL-MH
CHK 05/03/2010 T.DO
APVD 05/03/2010 T.DO

Amphenol TCS
A Division of Amphenol Corporation
200 Innovative Way, Nashua, NH 03062 603.879.3000

TITLE
BACKPLANE MODULES. VERTICAL MALE HEADER
XCede HD. 6 PAIR. 4 POSITION

PART NO. SEE PN TREE SHEET 1 — REV N/A

DRAWING NO. C-923-600J-500 — REV H

ASSEM :C923-600J-500 1.1
DRAWING :C923-600J-500 B.10

SIZE D | SCALE 1/1 | SHEET 8 OF 8

Downloaded from Arrow.com.