PASTERNACK
an INFINITE brand

WR-22 Waveguide Fixed Attenuator, 12 dB, from 33 GHz to 50 GHz, UG-383/U Round Cover Flange

Waveguide Fixed Attenuators Technical Data Sheet PEWAT1004-12

Features

- WR-22 Waveguide
- Frequency Range 33 to 50 GHz
- 12 dB fixed attenuation at center frequency
- UG-383/U Round Cover Flange
- Gold Plated Brass

Applications

- Instrumentation
- System Calibration
- Research and Development
- Test Benches

Description

PEWAT1004-12 is a WR-22 waveguide attenuator with 12 dB fixed attenuation, operating in the 33 to 50 GHz (Q band) frequency range. The attenuator uses an UG-383/U Round Cover flange that is Gold Plated Brass. Pasternack offers standard mid-band tuned Waveguide Fixed Attenuators with attenuation values of 1 to 30 dB in 1dB steps. Better attenuation flatness and accuracy can be achieved with additional tuning within a narrow band upon request.

Electrical Specifications

Description	Minimum	Typical	Maximum	Units
Frequency Range	33		50	GHz
Nominal Attenuation		12		dB
VSWR		1.4:1		

Mechanical Specifications

Description	Flange 1	Waveguide	Flange 2
Interface	UG-383/U	WR-22	UG-383/U
Material	Brass	Brass	Brass
Plating	Gold	Gold	Gold

Compliance Certifications (see product page for current document)

Plotted and Other Data

Notes:

Click the following link (or enter part number in “SEARCH” on website) to obtain additional part information including price, inventory and certifications: WR-22 Waveguide Fixed Attenuator, 12 dB, from 33 GHz to 50 GHz, UG-383/U Round Cover Flange PEWAT1004-12

Pasternack Enterprises, Inc. • P.O. Box 16759, Irvine, CA 92623
Phone: (866) 727-8376 or (949) 261-1920 • **Fax:** (949) 261-7451
Sales@Pasternack.com • Techsupport@Pasternack.com

© 2019 Pasternack Enterprises All Rights Reserved

WR-22 Waveguide Fixed Attenuator, 12 dB, from 33 GHz to 50 GHz, UG-383/U Round Cover Flange

Waveguide Fixed Attenuators Technical Data Sheet PEWAT1004-12

WR-22 Waveguide Fixed Attenuator, 12 dB, from 33 GHz to 50 GHz, UG-383/U Round Cover Flange from Pasternack Enterprises has same day shipment for domestic and International orders. Our RF, microwave and millimeter wave products maintain a 99.4% availability and are part of the broadest selection in the industry.

Click the following link (or enter part number in “SEARCH” on website) to obtain additional part information including price, inventory and certifications: WR-22 Waveguide Fixed Attenuator, 12 dB, from 33 GHz to 50 GHz, UG-383/U Round Cover Flange PEWAT1004-12

URL: https://www.pasternack.com/wr-22-waveguide-fixed-attenuator-12-db-50-ghz-pewat1004-12-p.aspx

The information contained in this document is accurate to the best of our knowledge and representative of the part described herein. It may be necessary to make modifications to the part and/or the documentation of the part, in order to implement improvements. Pasternack reserves the right to make such changes as required. Unless otherwise stated, all specifications are nominal. Pasternack does not make any representation or warranty regarding the suitability of the part described herein for any particular purpose, and Pasternack does not assume any liability arising out of the use of any part or documentation.

Pasternack Enterprises, Inc. • P.O. Box 16759, Irvine, CA 92623
Phone: (866) 727-8376 or (949) 261-1920 • **Fax:** (949) 261-7451
Sales@Pasternack.com • Techsupport@Pasternack.com

© 2019 Pasternack Enterprises All Rights Reserved

PEWAT1004-12 CAD Drawing

WR-22 Waveguide Fixed Attenuator, 12 dB, from 33 GHz to 50 GHz, UG-383/U Round Cover Flange

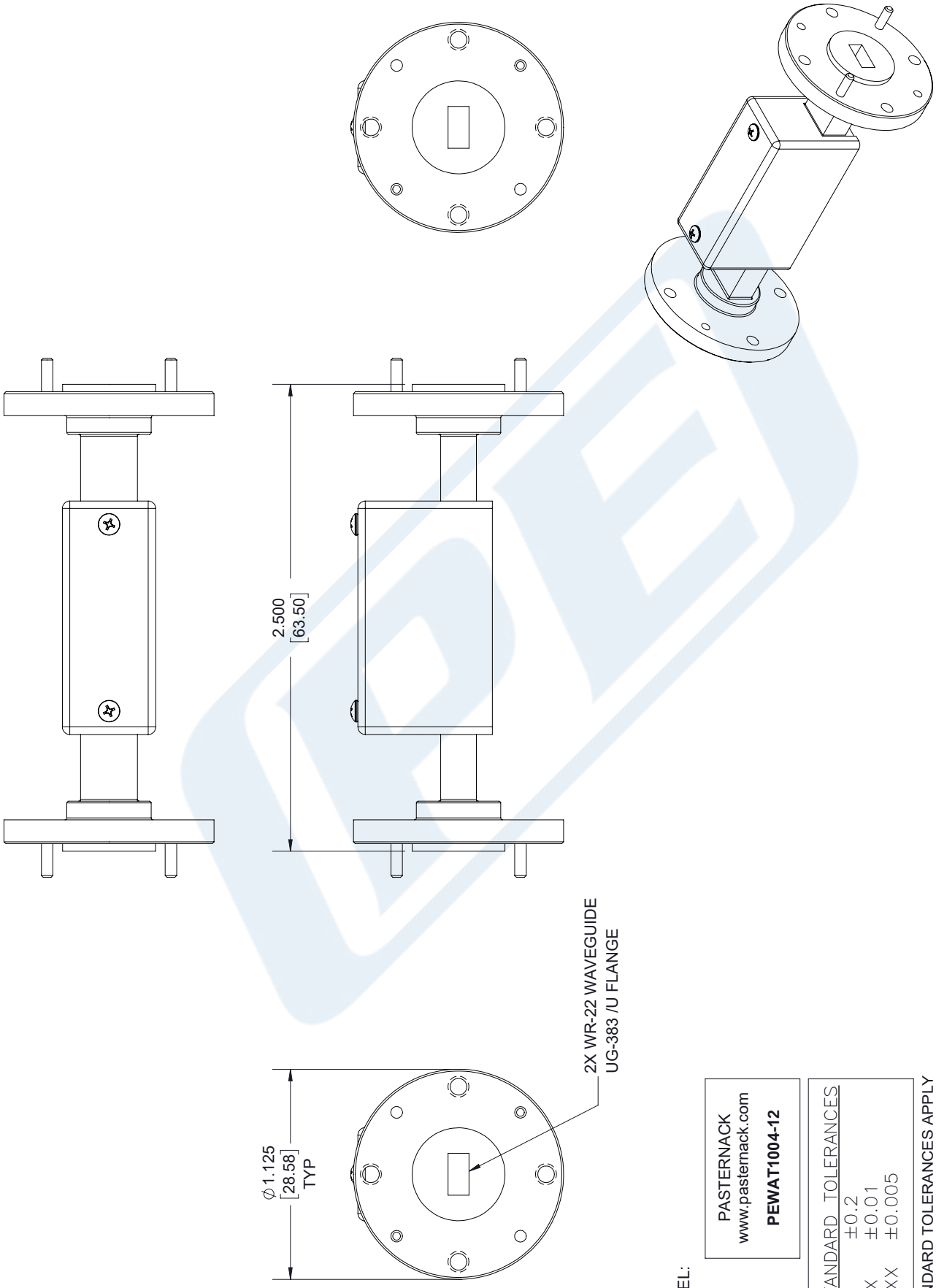

LABEL:

PASTERNACK
www.pasternack.com
PEWAT1004-12

STANDARD TOLERANCES
.X ±0.2
.XX ±0.01
.XXX ±0.005

*STANDARD TOLERANCES APPLY ONLY TO DIMENSIONS IN INCHES

NOTES:
1. UNLESS OTHERWISE SPECIFIED ALL DIMENSIONS ARE NOMINAL.
2. ALL SPECIFICATIONS ARE SUBJECT TO CHANGE WITHOUT NOTICE AT ANY TIME
3. DIMENSIONS ARE IN INCHES [mm].

DWG TITLE
PEWAT1004-12

CAD FILE 101317 | SCALE N/A | SIZE A | 7361

CAGE CODE 53919

PASTERNACK®
THE ENGINEER'S RF SOURCE
Pasternack Enterprises, Inc.
P.O. Box 16759 | Irvine | CA | 92623
Phone: (949) 261-1920 | **Fax:** (949) 261-7451
Website: www.pasternack.com | **E-Mail:** sales@pasternack.com

© 2019 Pasternack Enterprises All Rights Reserved