ГК Атлант Инжиниринг – официальный представитель в РФ и СНГ
+7 (495) 109-02-08 sales@bbrc.ru www.bbrc.ru

THIRD ANGLE PROJ.

REVISIONS				
REV	DESCRIPTION	DATE	ECO	APPR
A	RELEASE TO MFG.	18-Sep-08	-----	JY

NOTES:

1. MATERIALS AND FINISHES:

   BODY - ZINC ALLOY, NICKEL PLATED (.000100" MIN.)
   CONTACT - PHOSPHOR BRONZE, SELECTIVE GOLD PLATED (.000030" MIN.)
   FERRULE - SOFT COPPER ALLOY, NICKEL PLATED (.000100" MIN.)
   INSULATOR - PTFE, COLOR: WHITE
   HOUSING - PPO, COLOR: SEE TABLE BELOW
   CLIP - PBT, COLOR: YELLOW

   C01 CONNECTOR SUB-ASSEMBLY P/N: 903-821J-51S

   CONTACT SUPPLIED SEPARATELY AS P/N: FKCP0340IA (5,000 PC. REELS)
   FERRULE MAY BE PURCHASED SEPARATELY AS P/N: 923-10080 (100 PC. TRAYS)
   CABLE DEFINITIONS PER AMPHENOL REPORT DE825

2. ELECTRICAL:

   A. IMPEDANCE = 50 OHM, NOMINAL
   B. FREQUENCY RANGE = DC - 4 GHz
   C. VSWR = 1.400 (DC-2.0 GHz), 1.500 (2.0-4.0 GHz)
   D. D.W.V. = 800 VRMS, MIN.

3. MECHANICAL:

   A. DURABILITY = 100 CYCLES MIN.
   B. TEMPERATURE RANGE = -40° C TO +85° C
   c. MECHANICAL PULL = 110 N MIN.

4. CONNECTOR ASSEMBLY:

   A. SEE 349-50767 FOR CONNECTOR ASSEMBLY INSTRUCTIONS
   B. SEE 349-50748 OR 349-50750 FOR TOOLING
   C. SEE 349-50747 FOR CONTACT CRIMPING CRITERIA

5. PACKAGING:

   A. QUANTITY: TRAY PACK
   B. PACKAGING TO BE MARKED: AMPHENOL RF
      2FAH-NXSP-C01W9
      DATE CODE

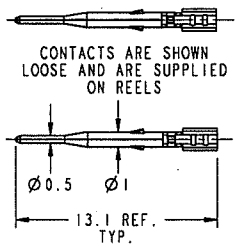

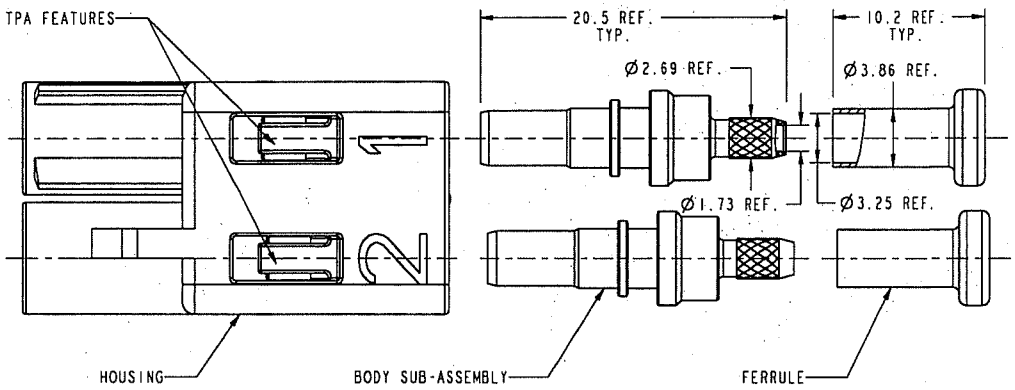

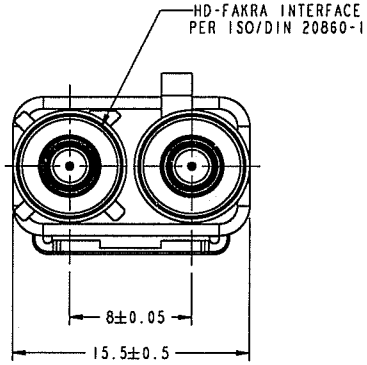

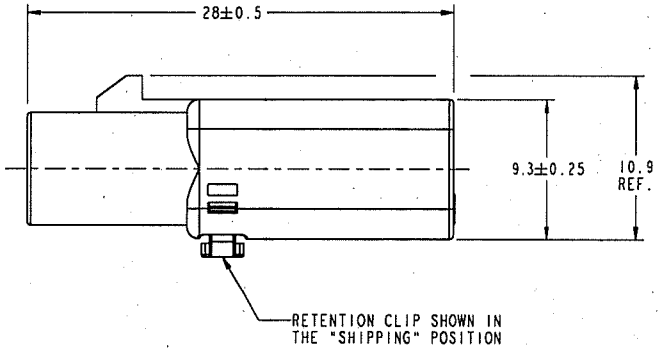

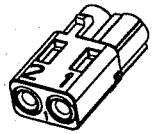

SCALE 1.000

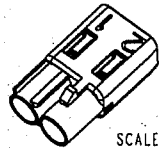

SCALE 1.000

CODING	DRAWING NO.	COLOR	RAL NO.
A	2FAH-NASP-C01W9	JET BLACK	9005
B	2FAH-NBSP-C01W9	CREAM	9001
C	2FAH-NCSP-C01W9	SIGNAL BLUE	5005
D	2FAH-NDSP-C01W9	CLARET VIOLET	4004
E	2FAH-NESP-C01W9	LEAF GREEN	6002
F	2FAH-NFSP-C01W9	NUT BROWN	8011
G	2FAH-NGSP-C01W9	BLUE GREY	7031
H	2FAH-NHSP-C01W9	HEATHER VIOLET	4003
I	2FAH-NISP-C01W9	BEIGE	1001
K	2FAH-NKSP-C01W9	CURRY	1027
L	2FAH-NLSP-C01W9	CARMINE RED	3002
M	2FAH-NMSP-C01W9	PASTEL ORANGE	2003
N	2FAH-NNSP-C01W9	PASTEL GREEN	6019
Z	2FAH-NZSP-C01W9	WATER BLUE	5021

CONFIGURATION CONTROL:
NO CHANGES PERMITTED TO DRAWING WITHOUT
PPAP QUALIFIED CUSTOMER APPROVAL

CUSTOMER OUTLINE DRAWING
ALL OTHER SHEETS ARE FOR INTERNAL USE ONLY

UNLESS OTHERWISE SPECIFIED, DIMENSIONS ARE IN METRIC AND TOLERANCES ARE:

0.5 - 6mm	6 - 30mm	30 - 120mm	ANGLES
±0.1mm	±0.2mm	± 0.3mm	±1°

NOTICE - These drawings, specifications, or other data (1) are, and remain the property of Amphenol Corp. (2) must be returned upon request; and (3) arre confidential and not to be disclosed to any person other than those to whom they are given by Amphenol Corp. the funishing of these drawings, specifications, or other data by Amphenol Corp., or to any other person to anyone for any purpose is not to be regarded by implicatioin or otherwise in any manner licensing, granting rights to permitting such holder or any other sperson to manufacture, use or sell any product, process or design, patented or otherwsie, that may in any way be related to or disclosed by said drawings, specifications, or other data.

MATERIAL
-

REFERENCE
EAR# 03141 AND

CONFIGURATION LEVEL:

FINISH

DRAWN J.YANG	DATE 18-Sep-08	
ENGINEER J.YANG	DATE 18-Sep-08	
APPROVED B.C.GLEISSNER	DATE 18-Sep-08	
CAD FILE I:\FAKRA\2FAH-NXSP-C01W9		

TITLE
HD-FAKRA PLUG,
DUAL, 8mm SPACING
2-C01 PORTS
(CONTACT SOLD SEPARATELY)

SCALE: 3.0:1.0	SHEET 2 OF 2	
DWG SIZE B	CODE ID 74868	REV A

Amphenol RF
Danbury CT USA, Tainan, Taiwan, Shenzhen, China
www.amphenolrf.com

DRAWING NO. 2FAH-NXSP-C01W9
ITEM NO. 2FAH-NXSP-C01W9
PART NO. 2FAH-NXSP-C01W9