ROHS COMPLIANT

REVISION HISTORY			
REV	DESCRIPTION	DATE	APPROVED
A	DCN 38106	03/11	PJS
B	DCN 41987	12/15	STW

PRODUCT DATA DRAWING

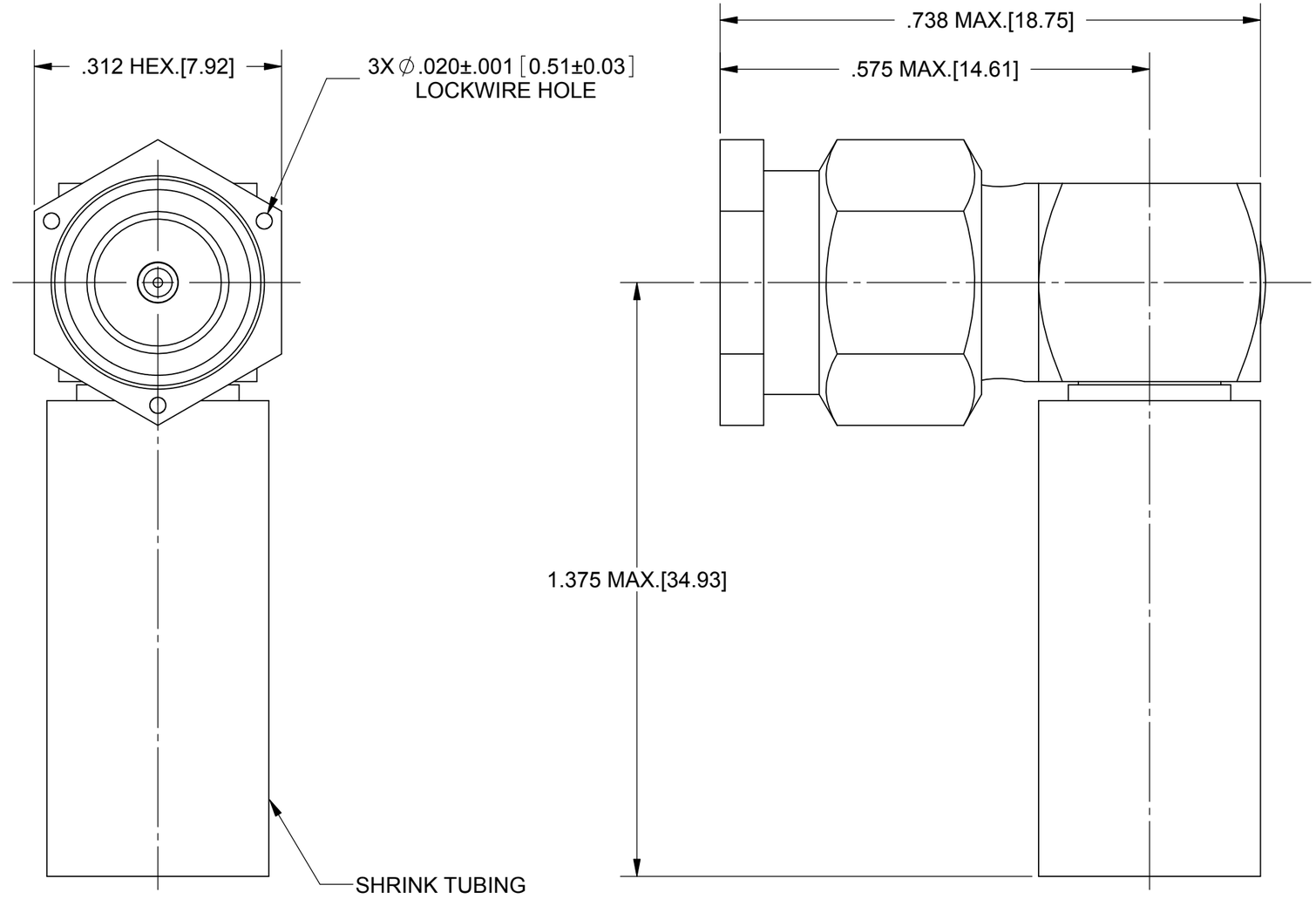

MATERIAL:

BODY, PRESS CAP & COUPLING NUT:	STAINLESS STEEL PER ASTM A582 OR AMS-5640, ALLOY UNS S30300
LOCK RING:	BERYLLIUM COPPER PER ASTM B196, ALLOY UNS C17300 OR ASTM B194, ALLOY UNS C17200
CONTACT & CRIMP RING:	BRASS PER ASTM B16, ALLOY UNS C36000
INSULATOR:	PTFE PER ASTM D1710, TYPE I, GRADE 1, CLASS B
GASKET:	SILICONE RUBBER PER A-A-59588, CLASS 2B, GRADE 50/60
SHRINK TUBING:	SCL POLYOLEFIN PER MIL-I-23053/4, CLASS I

FINISH:

BODY, PRESS CAP & COUPLING NUT:	PASSIVATED PER AMS-2700
CONTACT:	GOLD PER ASTM B488, TYPE II, CODE C, CLASS 1.27; OVER NICKEL PER AMS-QQ-N-290, CLASS 1, .00005" MIN.
CRIMP RING:	NICKEL PER QQ-N-290,CLASS 2, .00005" MIN.

PERFORMANCE:

IMPEDANCE:	50 OHMS
FREQ. RANGE:	DC TO 12.4 GHz
VSWR:	1.15 + .02 F (F IN GHz)
INSERTION LOSS:	.15 X SQRT(F(F IN GHz))
DWV:	1000 VRMS
OPERATING TEMP.:	-65˚C TO +165˚C

MATERIAL: SEE NOTES

FINISH: SEE NOTES

SURFACE AREA: N/A

PROPRIETARY

THE INFORMATION CONTAINED IN THIS DRAWING IS THE SOLE PROPERTY OF SV MICROWAVE, INC. ANY REPRODUCTION IN PART OR AS A WHOLE WITHOUT THE WRITTEN PERMISSION OF SV MICROWAVE, INC IS PROHIBITED.

DIMENSIONS ARE IN INCHES TOLERANCES:

FRACTIONAL: ±1/64 ANGULAR: X° ±1°0' X°X' ±15'

DECIMAL: .X ±.030 .XX ±.010 .XXX ±.005

INTERPRET DIMENSIONS AND TOLERANCES PER ASME Y14.5M - 1994

THIRD ANGLE PROJECTION

UNLESS OTHERWISE SPECIFIED

1) ALL DIMENSIONS ARE IN INCHES [MILLIMETERS]
2) ALL DIMENSIONS ARE AFTER PLATING.
3) BREAK CORNERS & EDGES .005 R. MAX.
4) CHAM. 1ST & LAST THREADS.
5) SURFACE ROUGHNESS 63₊MIL-STD-10.
6) DIA.'S ON COMMON CENTERS TO BE CONCENTRIC WITHIN .005 T.I.R.
7) REMOVE ALL BURRS

DRAWN:	PJS	03/20/11
CHECKED:	PJS	03/20/11
APPROVED:	ND	03/01/86

SV Microwave, Inc.
2400 Centrepark West Drive, Suite 100
West Palm Beach, FL 33409

TITLE: SMA PLUG R/A CRIMP ATTACHMENT FOR RG-142, 400, 223 CABLE

SIZE	CAGE CODE	DWG. NO.
B	95077	M39012/56-3028

SCALE: 6:1 SHEET 1 OF 1

Downloaded from Arrow.com.