ГК Атлант Инжиниринг – официальный представитель в РФ и СНГ
+7 (495) 109-02-08 sales@bbrc.ru www.bbrc.ru

NOTES:
1. MATERIALS AND FINISHES:
   BODY - ZINC ALLOY, NICKEL PLATING
   CONTACT -PHOPHOR BRONZE, GOLD PLATING (.000003 THICK)
   @CONTACT AREA ONLY, TIN PLATING AT TAIL, NICKEL PLATED OVERALL
   INSULATOR - POLYPROPYLENE
   HOUSING- PBT, BLACK, 15% G.F.
   GROUNDING TERMINAL-STEEL, TIN PLATING
   ROUND PIN-BRASS, TIN PLATING
2. ELECTRICAL:
   A. IMPEDANCE: 50 OHM
   B. FREQUENCY RANGE: DC - 1GHz
   C. DIELECTRIC WITHSTANDING VOLTAGE: 1500 VRMS, MIN.
3. MECHANICAL:
   A. DURABILITY: 500 CYCLES MIN.
   B. TEMPERATURE RANGE: -55° C TO 85° C
4. PACKAGING:
   A. PACKAGED IN PACKING TRAY
   B. QUANTITY PER TRAY: 40

THIRD ANGLE PROJ.

REVISIONS

| REV | DESCRIPTION | DATE | ECO | APPR |
|---|---|---|---|---|
| A | RELEASE TO MFG | 4/12/91 | 38057 | DR |
| E | SEE SHEET 1 | 10/11/96 | 41588 | CPM |
| F | SEE SHEET 1 | 2/3/05 | 45257 | CPM |
| G | UPDATED FORMAT AND NOMINAL ENVELOPE DIMENSIONS | 7/26/12 | 49146 | CW |
| H | SYNCH THE DRAWING WITH ARFA | 15-Aug-12 | 49198 | SH |

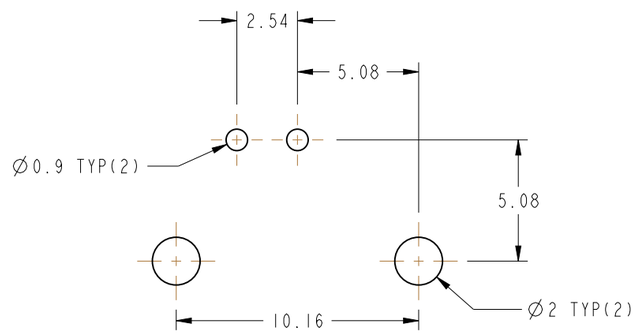


RECOMMENDED PCB LAYOUT

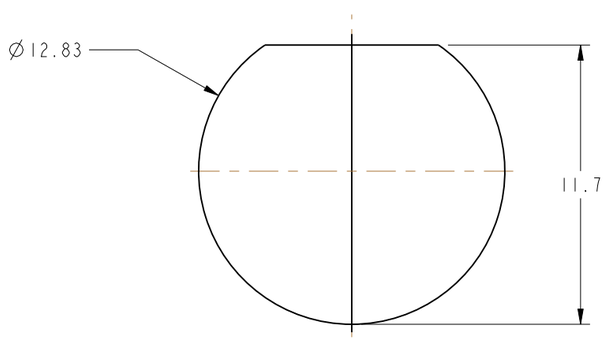


RECOMMENDED PANEL CUTOUT

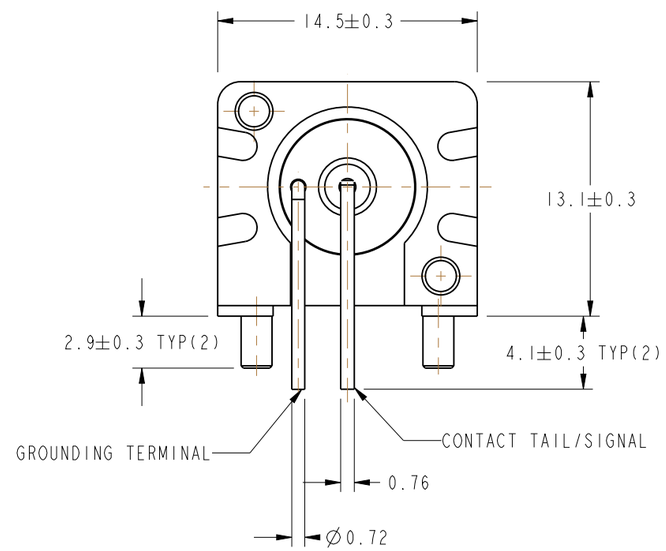


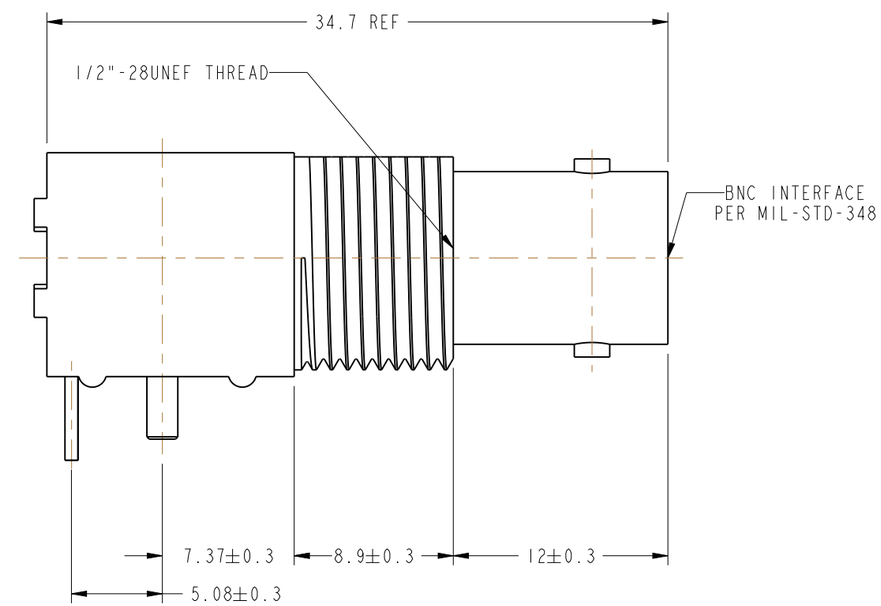


**CUSTOMER OUTLINE DRAWING**
ALL OTHER SHEETS ARE FOR INTERNAL USE ONLY

UNLESS OTHERWISE SPECIFIED, DIMENSIONS ARE IN METRIC AND TOLERANCES ARE:

| <0.5mm | 0.5 - 6mm | 6 - 30mm | 30 - 120mm | ANGLES |
|---|---|---|---|---|
| ± 0.05mm | ±0.1mm | ±0.2mm | ± 0.3mm | ±1° |

NOTICE - These drawings, specifications, or other data (1) are, and remain the property of Amphenol corp. (2) must be returned upon requiest; and (3) arre confidential and not to be disclosed to any person other than those to whom they are given by Amphenol Corp. the funishing of these drawings, specifications, or other data by Amphenol Corp., or to any other person to anyone for any purpose is not to be regarded by implicatioin or otherwise in any manner licensing, granting rights to permitting such holder or any other sperson to manufacture, use or sell any product, process or design, patented or otherwsie, that may in any way be related to or disclosed by said drawings, specifications, or other data.

MATERIAL
SEE NOTES

REFERENCE
EAR 71004-5

FINISH

| | | |
|---|---|---|
| DRAWN S.LI | DATE 15-Aug-12 | |
| ENGINEER D. ROYCE | DATE 4/8/91 | |
| APPROVED S.HSIEH | DATE 15-Aug-12 | |
| CAD FILE | | |

TITLE
BNC JACK, 50 OHM
LOW-PROFILE
PCB RECEPTACLE, BLACK
RIGHT ANGLE MOUNT

SCALE: 3.0:1.0 | SHEET 1 OF 2

DWG SIZE B | REV H

Amphenol RF
www.amphenolrf.com

DRAWING NO. 31-5540
ITEM NO. 31-5540
PART NO.31-5540