ГК Атлант Инжиниринг – официальный представитель в РФ и СНГ
+7 (495) 109-02-08 sales@bbrc.ru www.bbrc.ru

NOTES:

1. MATERIALS AND FINISHES:
   BODY, COUPLING NUT & CAP = STAINLESS STEEL, GOLD PLATING (.000004 THICK MIN)
   CONTACT = BeCu, GOLD PLATING (.000004 THICK MIN)
   INSULATOR = PTFE
   FERRULE = BRASS, GOLD PLATING (.000004 THICK MIN)
   GASKET = SILICONE RUBBER
   RETAINING RING = BeCu, WAX DIPPED

2. ELECTRICAL:
   A. IMPEDANCE: 50 OHM
   B. FREQUENCY RANGE: DC - 18 GHz
   C. VSWR(RETURN LOSS): 1.10 + .01f (GHz), MAX.
   D. DIELECTRIC WITHSTANDING VOLTAGE: 1000 VRMS, MIN.

3. MECHANICAL:
   A. DURABILITY: 500 CYCLES MIN.
   B. TEMPERATURE RANGE: -65° C TO 165° C

4. PACKAGING:
   A. QUANTITY: SINGLE PACK
   B. MARKING: BAG TO BE MARKED
      "AMPHENOL, PN:5, AND DATE CODE"

5. FOR CABLE STRIPPING AND ASSEMBLY INSTRUCTIONS SEE
   AMPHENOL SPEC 349-50180, SHEET 45. CRIMP WITH TOOL
   227-944, AND DIE SET 227-1221-37, CAVITY 'B', (.151 HEX).

6. ASTERICK (*) INDICATES CABLE ENTRY DIMENSIONS.

901-9531-12	REVISIONS				
DRAWING NO.	REV	DESCRIPTION	DATE	ECO	APPR
THIRD ANGLE PROJ.	--	RELEASE TO MFG.	------	------	----
	M	SEE SHEET 1.	3/18/04	44859	CPM
	N	SEE SHEET 1.	7/10/06	46155	CPM
	P	ADD NOTE 6 & CABLE ENTRY DIM'S	8/7/12	49022	CPM

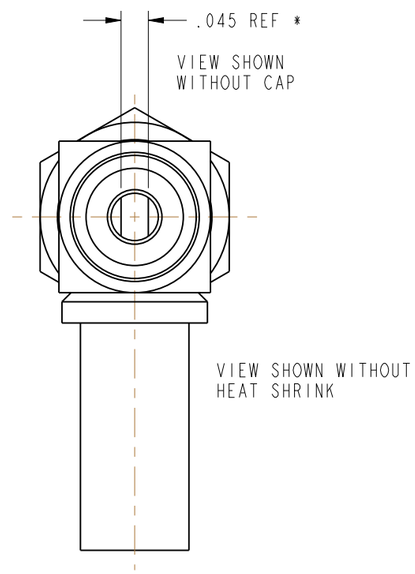

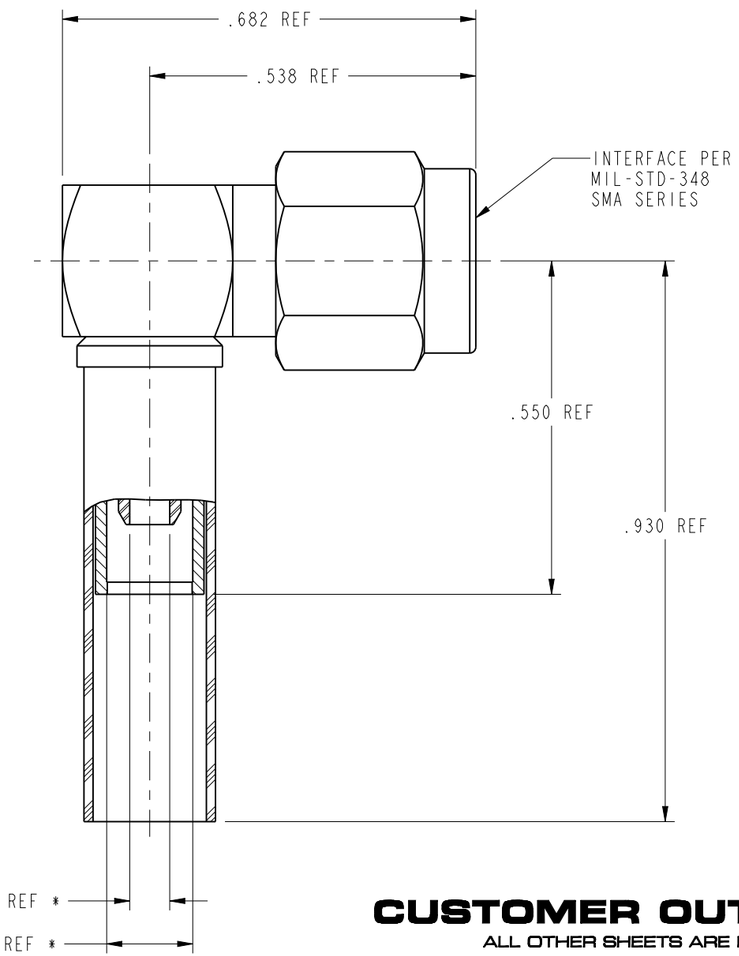

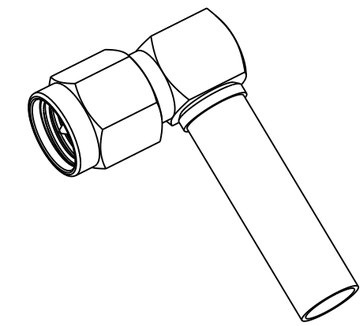

CUSTOMER OUTLINE DRAWING
ALL OTHER SHEETS ARE FOR INTERNAL USE ONLY

UNLESS OTHERWISE SPECIFIED, DIMENSIONS ARE IN INCHES AND TOLERANCES ARE:
2 PLACE DECIMAL ±.015 (0,381 mm) | 3 PLACE DECIMAL ±.005 (0,127 mm) | ANGLES ± 1°

NOTICE - These drawings, specifications, or other data (1) are, and remain the property of Amphenol Corp. (2) must be returned upon request; and (3) are confidential and not to be disclosed to any person other than those to whom they are given by Amphenol Corp. The furnishing of these drawings, specifications, or other data by Amphenol Corp., or to any other person to anyone for any purpose is not to be regarded by implication or otherwise in any manner licensing, granting rights or permitting such holder or any other person to manufacture, use or sell any product, process or design, patented or otherwise, that may in any way be related to or disclosed by said drawings, specifications, or other data.

MATERIAL

REFERENCE

DRAWN C. McGRATH	DATE 3/10/04	
ENGINEER D. ROYCE	DATE 2/24/93	
APPROVED F.S. HULL	DATE 1/25/90	
CAD FILE 1:\SMA\901-9531-12		

TITLE
SMA (MALE) CRIMP
RIGHT ANGLE FOR
M17/152-00001 CABLE

Amphenol RF
Danbury, CT, USA
Tainan, Taiwan
Shenzhen, China
www.amphenolrf.com

SCALE: 4.0:1 | SHEET 2 OF 2

CODE ID	DWG SIZE	DRAWING NO.	REV
74868	B	901-9531-12	P