ГК Атлант Инжиниринг – официальный представитель в РФ и СНГ
+7 (495) 109-02-08 sales@bbrc.ru www.bbrc.ru

NOTES:

REFERENCE STANDARD IEC60169-11 (4.1/9.5) IEC60169-16 (N)

I. ELECTRICAL PERFORMANCE -

NOMINAL IMPEDANCE	: 50 Ω
FREQUENCY RANGE	: DC-3.0 GHz
VSWR	: 1.065 MAX.
PIM	: -160dBc MAX.(1800MHz)
INSERTION LOSS	: -0.05 dB MAX. (@3.0 GHz)
INSULATION RESISTANCE	: 5000 MΩ MIN.
D.W.V	: 2500 VRMS
CONTACT RESISTANCE	: OUTER CONDUCTOR 0.4 mΩ MAX (N) 0.5 mΩ MAX (4.1/9.5)
	INNER CONDUCTOR 0.8 mΩ MAX (N) 1.0 mΩ MAX (4.1/9.5)

II. MECHANICAL PERFORMANCE -

RETENTION	: 4.00 N MIN (4.1/9.5)
MATING CYCLES	: 500 MIN
NUT - TORQUE	: 5 N-m (N)
NUT - AXIAL PULL	: 500 N

III. MATERIAL AND PLATING -

INNER CONDUCTOR	: SPRING COPPER ALLOY, PLATING = Ag (5µm MIN.)
OUTER CONDUCTOR	: BRASS, PLATING = Ag (5µm MIN.)
NUT	: BRASS, PLATING = NI (5µm MIN.)
GASKET	: SILICONE RUBBER
INSULATOR	: PTFE

IV. ENVIRONMENTAL -

TEMP.RANGE	: -40°C TO +85°C
WEATHER STANDARD	: IEC 60068 40 / 085/ 21
THERMAL SHOCK	: IEC 60068 -2-14-NA
VIBRATION	: IEC 60068-2-6-Fc
SHOCK	: IEC 60068-2-27

V. ROHS COMPLIANT.

242281	REVISIONS				
DRAWING NO.	REV	DESCRIPTION	DATE	ECO	APPR
THIRD ANGLE PROJ.	A	RELEASE TO MFG.	16-Sep-13	--	MB/BCG

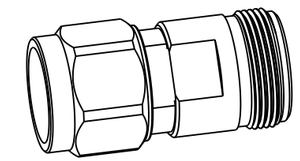

SCALE 1.000

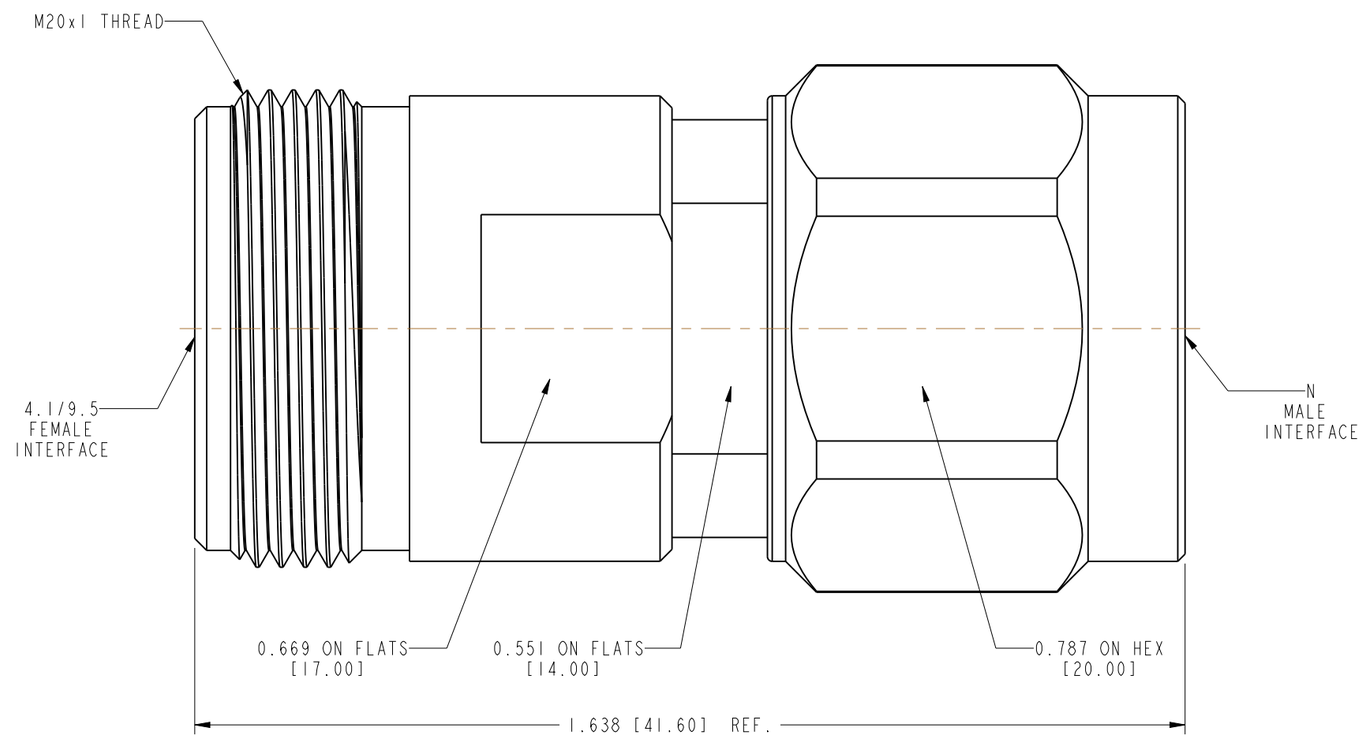

CUSTOMER OUTLINE DRAWING

ALL OTHER SHEETS ARE FOR INTERNAL USE ONLY

UNLESS OTHERWISE SPECIFIED, DIMENSIONS ARE IN INCHES AND TOLERANCES ARE:

2 PLACE DECIMAL	3 PLACE DECIMAL	ANGLES
±.015 (0,381 mm)	±.005 (0,127 mm)	± 1°

NOTICE - These drawings, specifications, or other data (1) are, and remain the property of Amphenol Corp. (2) must be returned upon request; and (3) are confidential and not to be disclosed to any person other than those to whom they are given by Amphenol Corp. The furnishing of these drawings, specifications, or other data by Amphenol Corp., or to any other person to anyone for any purpose is not to be regarded by implication or otherwise in any manner licensing, granting rights or permitting such holder or any other person to manufacture, use or sell any product, process or design, patented or otherwise, that may in any way be related to or disclosed by said drawings, specifications, or other data.

MATERIAL: SEE NOTES	DRAWN: MOHAN	DATE: 05-Sep-13	TITLE: 4.1/9.5 FEMALE TO N MALE ADAPTER
	ENGINEER: MOHAN	DATE: 05-Sep-13	
REFERENCE	APPROVED: B.C. GLEISSNER	DATE: 16-Sep-13	
	CAD FILE		

Amphenol Connex

SCALE: 4.0:1	SHEET 1 OF 1	
DWG SIZE: B	DRAWING NO.: 242281	REV: A