ГК Атлант Инжиниринг – официальный представитель в РФ и СНГ
+7 (495) 109-02-08 sales@bbrc.ru www.bbrc.ru

THIRD ANGLE PROJ.

REVISIONS				
REV	DESCRIPTION	DATE	ECO	APPR
T	RELEASE TO MFG	-----	-----	
T	SEE SHEET 1	4/22/10	48046	CPM

NOTES:

1. MATERIALS AND FINISHES:
   - BODY/FLANGE S/A - BRASS, SILVER PLATING (.000200 MIN THICK)
   - CONTACT & OUTER CONTACT - BRASS, SILVER PLATING (.000200 MIN THICK)
   - INSULATORS (2) - CO-POLYMER OF STYRENE
   - GASKET - SILICONE RUBBER
   - COUPLING NUT - BRASS, NICKEL PLATING (.000100 MIN THICK)
   - RETAINING RING - PHOSPHOR BRONZE
   - RETAINING RING - BERYLLIUM COPPER

2. ELECTRICAL:
   - A. IMPEDANCE: 50 OHM
   - B. FREQUENCY RANGE: DC - 11 GHz
   - C. VSWR(RETURN LOSS): 1.3 (17.69 dB), MAX.
   - D. DIELECTRIC WITHSTANDING VOLTAGE: 2,500 VRMS, MIN.

3. MECHANICAL:
   - A. TEMPERATURE RANGE: -55° C TO +85° C

4. PACKAGING:
   - A. QUANTITY: SINGLE PACK
   - B. MARKING: BAG TO BE MARKED "AMPHENOL, 49000, AND DATE CODE"

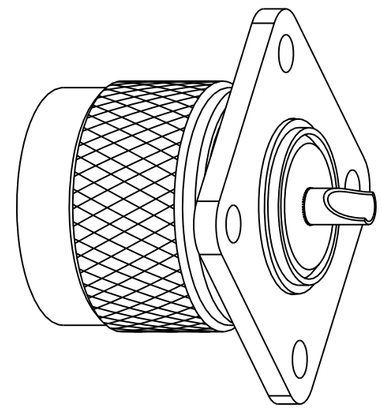

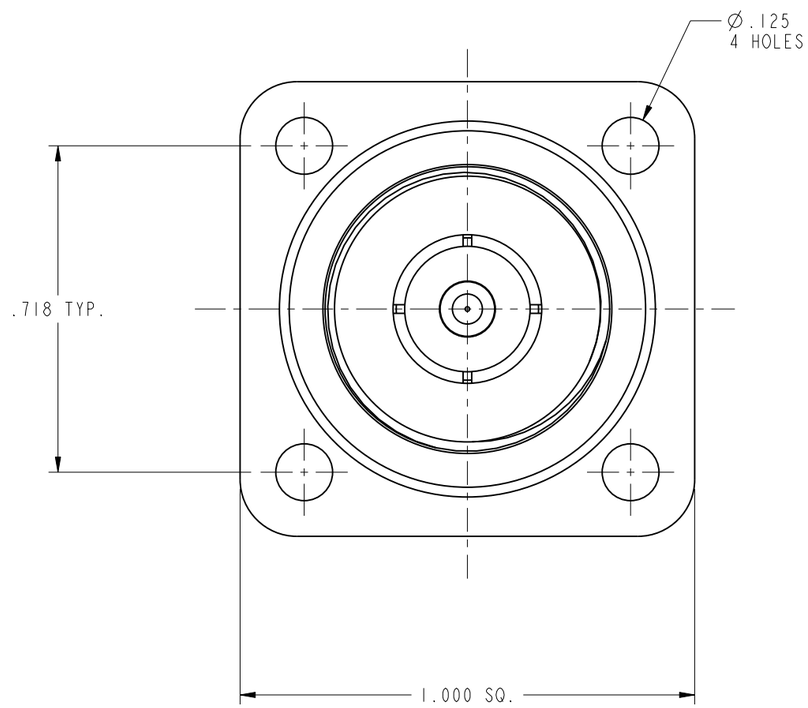

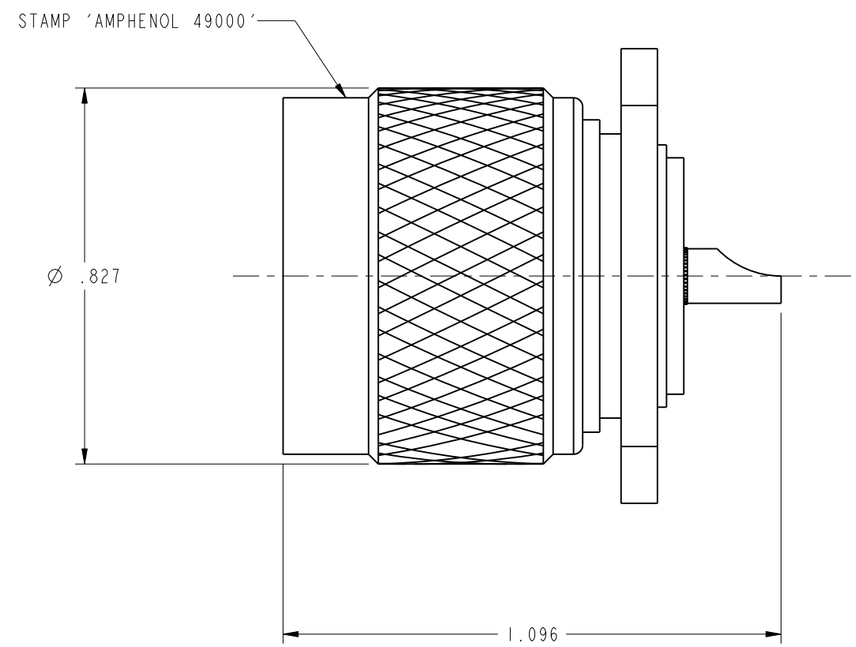

CUSTOMER OUTLINE DRAWING

ALL OTHER SHEETS ARE FOR INTERNAL USE ONLY

UNLESS OTHERWISE SPECIFIED, DIMENSIONS ARE IN METRIC AND TOLERANCES ARE:

<0.5mm	0.5 - 6mm	6 - 30mm	30 - 120mm	ANGLES
± 0.05mm	±0.1mm	±0.2mm	± 0.3mm	±1°

NOTICE - These drawings, specifications, or other data (1) are, and remain the property of Amphenol corp. (2) must be returned upon requiest; and (3) arre confidential and not to be disclosed to any person other than those to whom they are given by Amphenol Corp. the funishing of these drawings, specifications, or other data by Amphenol Corp., or to any other person to anyone for any purpose is not to be regarded by implicatioin or otherwise in any manner licensing, granting rights to permitting such holder or any other sperson to manufacture, use or sell any product, process or design, patented or otherwsie, that may in any way be related to or disclosed by said drawings, specifications, or other data.

MATERIAL -	DRAWN C. McGRATH	DATE 30-Mar-10	TITLE TYPE N PANEL MOUNTED MALE RECEPTACLE
	ENGINEER K. CAPOZZI	DATE 30-Mar-10	
REFERENCE AND CONFIGURATION LEVEL: Prototype	APPROVED K. CAPOZZI	DATE 4/21/10	SCALE: 2.0:1.0 SHEET 2 OF 2
	CAD FILE Root Folder/N/49000		DWG SIZE B / REV T
FINISH			

Amphenol RF
Danbury CT USA, Tainan, Taiwan, Shenzhen, China
www.amphenolrf.com

DRAWING NO. 49000
ITEM NO. 49000
PART NO. 49000