Downloaded from Arrow.com.

REV.	DATE	ECR NO.	DESCRIPTION
NC	01/28/99	–	INITIAL RELEASE
A	12/16/08	100064	UPDATE DRAWING FORMAT

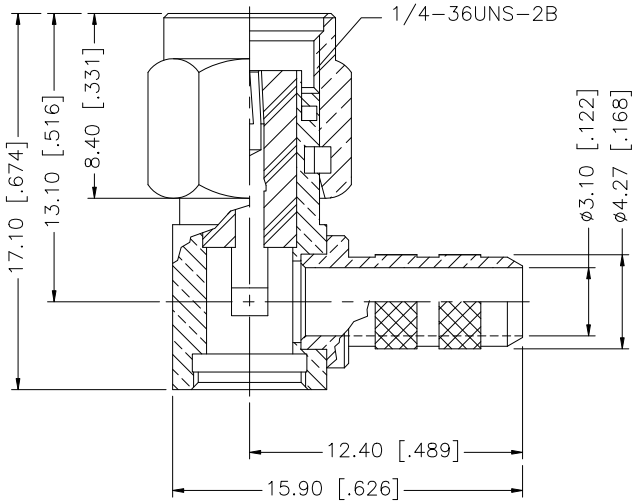

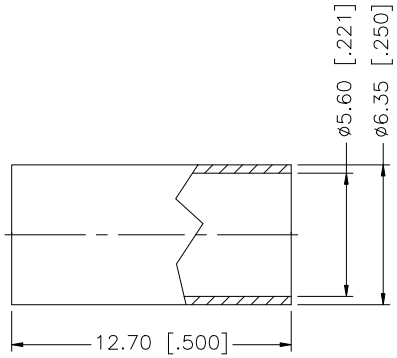

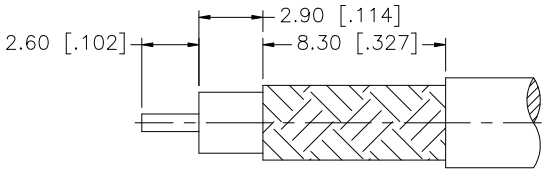

RECOMMENDED
CABLE STRIPPING DIM'S

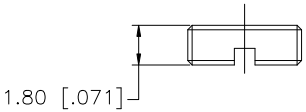

NOTE:

1. CRIMPED FERRULE HEX CRIMP SIZE .213" [5.41]
2. CONTACT PIN TO SOLDER.

	DESCRIPTION	MATERIAL	FINISH	QTY
8	FERRULE	COPPER	GOLD	1
7	COVER	BRASS	GOLD	1
6	GASKET	SILICONE	RED	1
5	RETAINER RING	BER. COPPER	NATURAL	1
4	CONTACT PIN	BER. COPPER	GOLD	1
3	INSULATOR	PTFE	NATURAL	1
2	HOUSING	BRASS	GOLD	1
1	BODY/SHELL	BRASS	GOLD	1

UNLESS OTHERWISE SPECIFIED DIMENSIONS ARE IN MILLIMETERS. DIMENSIONS IN [ ] ARE IN INCHES AND FOR CUSTOMER REFERANCE ONLY.

UNLESS OTHERWISE SPECIFIED TOLERANCES FOR MILLIMETERS ARE:
0.5 – 8mm ± 0.20mm
8 – 30mm ± 0.40mm
30 – 120mm ± 0.50mm

UNLESS OTHERWISE SPECIFIED TOLERANCES FOR INCHES ARE:
.020 – .315 = ± 0.007"
.315 – 1.180 = ± 0.015"
1.180 – 4.724 = ± 0.020"

DO NOT SCALE DRAWING

APPROVALS		DATE
DRAWN	GRS	12/16/08
CHECKED		
ISSUED		
SHEET	1 OF 1	

CAD FILE C:/132/132194RP.DWG

Amphenol Connex

PART DESCRIPTION
SMA R/A CRIMP PLUG – REVERSE POLARITY
(FOR RG223/U, 400/U CABLE)

PART NO. 132194RP

DWG. NO.	REV.	SIZE	SCALE
132194RP.DWG	A	A	NA